State of New Hampshire
Division of Plant and Property Management
Bureau of Purchase and Property
25 Capitol Street, State House Annex
Concord, New Hampshire 03301-6398

Date: **6/8/2004**

Bid No.: **464**

Date of Bid Opening: **6/24/2004**

Time of Bid Opening: **1:30 PM**

PLEASE DIRECT ANY QUESTIONS REGARDING THIS BID TO: **Michael P. Walsh II, Purchasing Agent/las**

TEL. NO: **(603) 271-3235 - FAX No. (603) 271-2700**

REQUEST FOR BID FOR A CONTRACT FOR: **GENERATOR & TRANSFER SWITCH, (SUPPLY AND INSTALL)**

Unless specifically amended or deleted by the Division of Plant and Property Management, the following General Terms and Conditions apply to this Bid and any resulting Purchase Order or Contract.

GENERAL CONDITIONS AND INSTRUCTIONS:

NATURE OF, AND ELIGIBILITY TO RESPOND. This RFB is submitted in accordance with Chapter 21-1, and rules promulgated thereunder, and constitutes a firm and binding offer. An RFB may not be withdrawn unless permission is obtained from the Bureau of Purchase and Property.
RFBs may be issued only by the Bureau of Purchase and Property and are not transferable.
SAMPLES AND DEMONSTRATIONS. When samples are required they must be submitted free of costs and will not be returned.
Items left for demonstration or evaluation purposes shall be delivered and installed free of charge and shall be removed at no cost to the State. Demonstration units shall not be offered to the State as new equipment.

Proposals. Proposals must be received at the Bureau of Purchase and Property before the date and time specified for the opening. Proposals must be submitted on this proposal form or exact copies and must be typed or clearly printed in ink. Corrections must be initialed. Proposals are to be made less Federal Excise Tax and no charge for handling unless required by law.
Proposals will be made available to the public after the time of award. Proposal results will be given by mail only if requested in writing and accompanied by a self-addressed, stamped business size envelope.

SPECIFICATIONS. Vendors must submit on items as specified. Proposed changes must be submitted in writing and received at the Bureau of Purchase and Property at least five (5) working days prior to the bid opening. Vendors shall be notified in writing if any changes to the specifications are made.

AWARD. The award will be made to the responsible Vendor submitting a conforming RFB meeting specifications at the lowest cost unless other criteria are noted in the RFB. Unless otherwise noted, the award may be made by individual items.

If there is a discrepancy between the unit price and the extension, the unit price will prevail.

When identical low proposals are received the award will be made in accordance with the Administrative Rules.

Discounts will not be considered in making award but may be offered on the Invoice for earlier payment and will be applicable on the date of completion of delivery or receipt of Invoice, whichever is later. On orders specifying split deliveries, discounts will apply on the basis of each delivery or receipt of Invoice, whichever is later.

PATENT INFRINGEMENT. Any responding vendor who has reason to believe that any other responding vendor will violate a patent should such responding vendor be awarded the contract shall set forth in writing, prior to the date and time of opening, the grounds for his belief and a detailed description of the patent.

ASSIGNMENT PROVISION. The responding vendor hereby agrees to assign all causes of action that it may acquire under the antitrust laws of New Hampshire and the United States as the result of conspiracies, combinations, or contracts in restraint of trade which materially affect the price of goods or services obtained by the state under this contract if so requested by the State of New Hampshire.

FEDERAL FUNDS. This Division of Plant and Property Management, under RSA 21-1:14, VIII shall assure the continuation or granting of federal funds or other assistance not otherwise provided for by law by following the Federal Procurement Standards.
STATE'S OPTIONS: The Bureau of Purchase and Property reserves the right to reject or accept all or any part of any proposal, to determine what constitutes a conforming RFB, to award the RFB solely as it deems to be in the best interest of the State, and to waive irregularities that it considers not material to the RFB.
PUBLIC INFORMATION: The responding vendor hereby acknowledges that all information relating to this RFB and any resulting order (Including but not limited to fees, contracts, agreements and prices) are subject to these laws of the State of New Hampshire regarding public information.
PERSONAL LIABILITY: The responding vendor agrees that in the preparation of this RFB or the execution of any resulting contract or order, representatives of the State of New Hampshire shall incur no liability of any kind.

PROOF OF COMPLIANCE. The responding vendor may be required to supply proof of compliance with proposal specifications. When requested, the responding vendor must immediately supply the Bureau of Purchase and Property with certified test results or certificates of compliance. Where none are available, the State may require independent laboratory testing. All costs for such testing, certified test results or certificate of compliance shall be the responsibility of the responding vendor.
FORM OF CONTRACT. The terms and conditions set forth in any additional Terms and Conditions by the Bureau of Purchase and Property are part of the proposal and will apply to any contract awarded the responding vendor unless specific exceptions are taken and accepted and will prevail over any contrary provisions in Terms and Conditions submitted by the responding vendor.
OFFER. The undersigned hereby offers to sell to the State of New Hampshire the commodities or services indicated in the following page(s) of this RFB at the price(s) quoted in complete accordance with all conditions of this RFB.

Company Name:_____

Address: _____

_____

Tel.#:(local)_____ **(Toll free)**_____

Fax#:_____ **Email**_____
Authorized Signature:_____

_____
(TYPE OR PRINT NAME)

This document must be signed by a person who is authorized to legally obligate the responding vendor. A signature on this document indicates that all State of New Hampshire terms and conditions are accepted by the responding vendor and that any and all other terms and conditions submitted by the responding vendor are null and void, even if such terms and conditions have terminology to the contrary. The responding vendor shall also be subject to State of New Hampshire terms and conditions as stated on the reverse of the purchase order.

CONTRACT TERMS AND CONDITIONS

1. The State of New Hampshire, acting through the Division of Plant and Property Management, engages the firm or individual ("the Vendor") to perform the services and/or sale of goods, described in the attached State documents, if any, and the Vendor's bid or quotation, both of which are incorporated herein by reference.

2. COMPLIANCE BY VENDOR WITH LAWS AND REGULATIONS. In connection with the performance of this agreement, the Vendor shall comply with all statutes, laws, regulations, and orders of federal, state, county or municipal authorities which shall impose any obligation or duty upon the Vendor, including, but not limited to civil rights and equal opportunity laws.

3. TERM. The contract, and all obligations of the parties thereunder, shall become effective on a specified date and shall be completed in their entirety prior to a specified date. Any work undertaken by the Vendor prior to the effective date shall be at his sole risk and, in the event that the contract shall not become effective, the State shall be under no obligation to reimburse the Vendor for any such work.

4. CONTRACT PRICE. The contract price, a payment schedule and a maximum limitation of price shall be as specified by the bid invitation and the Vendor's bid. All payments shall be conditioned upon receipt, and approval by the State, of appropriate vouchers and upon satisfactory performance by the Vendor, as determined by the State. The payment by the State of the Contract Price shall constitute complete reimbursement to the Vendor for all expenses of any nature incurred by the Vendor in the performance by the Vendor and complete payment for the Services. The State shall have no other liability to the Vendor.

5. DELIVERY. If the vendor fails to furnish items and/or services in accordance with all requirements, including delivery, the state may re-purchase similar items from any other source without competitive bidding, and the original vendor may be liable to the state for any excess costs.

If a vendor is unable to complete delivery by the date specified, he must contact the using agency. However, the agency is not required to accept a delay to the original delivery date. All deliveries are subject to inspection and receiving procedure rules as established by the State of New Hampshire. Deliveries are not considered accepted until compliance with these rules has been established. State personnel signatures on shipping documents shall signify only the receipt of shipments. All deliveries shall be FOB Destination.

6. INVOICING. All invoices must be in triplicate showing Order Number, Unit and Extension Prices and discounts allowed. A separate invoice shall be submitted for each order. Unless otherwise noted on the invitation to bid or purchase order, payment will not be due until thirty (30) days after all services have been completed, or all items have been delivered, inspected and accepted or the invoice has been received at the agency business office, whichever is later.

7. PERSONNEL.

7.1. The Vendor shall disclose in writing the names of all owners (5% or more), directors, officers, employees, agents or subcontractors who are also officials or employees of the State of New Hampshire. Any change in this information shall be reported in writing within fifteen (15) days of their occurrence.

7.2. The person signing this agreement on behalf of the State, or his or her delegee ("Contracting Officer") shall be the State's representative for purposes of this agreement. In the event of any dispute concerning the interpretation of this agreement, the Contracting Officer's decision shall be final.

8. EVENT OF DEFAULT; REMEDIES.

8.1. Any one or more of the following acts or omissions of the Vendor shall constitute an event of default hereunder ("Events of Default"):

8.1.1. failure to deliver the goods or services satisfactorily or on schedule; or

8.1.2. failure to submit any report required hereunder; or

8.1.3. failure to perform any of the other covenants and conditions of this agreement.

8.2. Upon the occurrence of any Event of Default, the State may take any one, or more, or all, of the following actions:

8.2.1. give the Vendor a written notice specifying the Event of Default and requiring it to be remedied within, in the absence of a greater or lesser specification of time, thirty (30) days from the date of the notice; and if the Event of Default is not timely remedied, terminate this agreement, effective two (2) days after giving the Vendor notice of termination; and

8.2.2. give the Vendor a written notice specifying the Event of Default and suspending all payments to be made under this agreement and ordering that the portion of the Contract Price, which would otherwise accrue to the Vendor during the period from the date of such notice until such time as the State determines that the Vendor has cured the Event of Default, shall never be paid to the Vendor; and

8.2.3. set off against any other obligation the State may owe to the Vendor any damages the State suffers by reason of any Event of Default; and

8.2.4. treat the agreement as breached and pursue any of its remedies at law or in equity, or both.

9. WAIVER OF BREACH. No failure by the State to enforce any provisions hereof after any Event of Default shall be deemed a waiver of its rights with regard to that Event, or any subsequent Event. No express failure of any Event of Default shall be deemed a waiver of any provision hereof. No such failure or waiver shall be deemed a waiver of the right of the State to enforce each and all of the provisions hereof upon any further or other default on the part of the Vendor.

10. VENDOR'S RELATION TO THE STATE. In the performance of this agreement the Vendor is in all respects an independent contractor, and is neither an agent nor an employee of the State. Neither the Vendor nor any of its officers, employees, agents or members shall have authority to bind the State nor are they entitled to any of the benefits, workmen's compensation or emoluments provided by the State to its employees.

11. ASSIGNMENT AND SUBCONTRACTS. The Vendor shall not assign, or otherwise transfer any interest in this agreement without the prior written consent of the State. No work required by this contract shall be subcontracted without the prior written consent of the State.

12. INDEMNIFICATION. The contractor shall defend, indemnify and hold harmless the State, its officers and employees, from and against any and all losses suffered by the State, its officers and employees, and any and all claims, liabilities or penalties asserted against the State, its officers and employees, by or on behalf of any person, on account of, based on, resulting from, arising out of (or which may be claimed to arise out of) the acts or omissions of the Vendor. Notwithstanding the foregoing, nothing herein contained shall be deemed to constitute a waiver of the sovereign immunity of the State, which immunity is hereby reserved to the State. This covenant shall survive the termination of this agreement.

12.1 PATENT PROTECTION. The seller agrees to indemnify and defend the State of New Hampshire from all claims and losses resulting from alleged and actual patent infringements and further agrees to hold the State of New Hampshire harmless from any liability arising under RSA 382-A:2-312(3). (Uniform Commercial Code).

13. TOXIC SUBSTANCES. In compliance with RSA 277-A known as the Workers Right to Know Act, the vendor shall provide Material Safety Data Sheets with the delivery of any and all products covered by said law.

14. NOTICE. Any notice by a party hereto to the other party shall be deemed to have been duly delivered or given at the time of mailing by certified mail, postage prepaid, in a United States Post Office addressed to the parties at the addresses given below.

15. AMENDMENT. This agreement may be amended, waived or discharged only by an instrument in writing signed by the parties hereto.

16. CONSTRUCTION OF AGREEMENT AND TERMS. This agreement shall be construed in accordance with the laws of the State of New Hampshire, and is binding upon and inures to the benefit of the parties and their respective successors and assigns.

17. ADDITIONAL PROVISIONS. The additional provisions (if any) have been set forth as Exhibit "A" hereto.

18. ENTIRE AGREEMENT. This agreement, which may be executed in a number of counterparts, each of which shall be deemed an original, constitutes the entire agreement and understanding between the parties, and supersedes all prior agreements and understandings relating hereto.

BID INVITATION FOR: GENERATOR & TRANSFER SWITCH, (SUPPLY AND INSTALL)

PURPOSE:
The purpose of this bid invitation is to establish a contract in the form of a purchase order for supplying the State of New Hampshire, Department of Transportation with *ELECTRICAL WORK FOR PROVIDING A GENERATOR AND, TRANSFER SWITCH* as specified in accordance with the requirements of this bid invitation and any resulting order. These items shall be a one-time order with delivery required to the location indicated in the F.O.B. section of this bid invitation.

VENDOR CERTIFICATIONS
All bidders must be duly registered as a vendor authorized to conduct business in the State of New Hampshire.

- **STATE OF NEW HAMPSHIRE VENDOR APPLICATION**.
  Bidders must have a completed Vendor Application and W-9 Form on file with the NH Bureau of Purchase and Property. See the following website for information on obtaining and filing the required forms (no fee): **http://www.admin.state.nh.us/purchasing**

- **NEW HAMPSHIRE SECRETARY OF STATE REGISTRATION**
  A person or persons conducting business under any name other than his/her own legal name must register with the NH Secretary of State. Businesses are classified as 'Domestic' (in-state) or 'foreign' (out-of-state). Please visit the following website to find out more about the requirements and filing fees for both classifications: **http://www.state.nh.us/sos/corporate**

SCOPE OF WORK:
Work within this request for bid (RFB) shall include providing generator, concrete pad and installation of electrical equipment as described herein. Work shall include removal of existing systems, installation of a pad mounted generator, disconnect switch, transfer switch, conduit systems, adapting and extending existing wires and cables etc. to obtain a fully working automatic standby system.

SPECIFICATION COMPLIANCE:
The manufacturer and / or models indicated are representative of the type and quality required. You may bid different makes and models; however, your offer must be materially similar to the ones indicated.

If there are any specifications indicated in this bid invitation, they will be considered the minimum requirements. Bidder's offer MUST meet or exceed these minimum requirements.

SPECIFICATION - GENERATOR:
The generator is required to have **all** of the following:

1 ea 20 kw rated stand by generator
Diesel fuel operation
Liquid cooled engine
4 cycle, 1800 rpm
Rubber pad type vibration isolators
Vibration isolated auto start control panel w/ instrumentation to include voltmeter, ammeter, frequency, tachometer & hour run meter
Coolant heater or Jacket water heater, mounted
Lead acid battery set, unit mounted
Auto float/ equalize UL listed battery - charger, minimum output is 3 amps
Generator to be delivered with initial fill of lubricating oil and antifreeze with engine antifreeze rated for –30F
One (1) ea. operation and parts/ maintenance manual.
120/ 240 60 hertz single phase operation
Solid state voltage regulator
Self regulating brush less battery charging alternator
Outdoor weather enclosure
Low coolant level shutdown protection
Certification per NFPA 110 compliance
Bidder will supply, coordinate delivery, uncrate and set unit in place on generator pad.
Critical silencer
Electronic governor with performance not to exceed ¼% frequency regulation
Double wall fuel tank, 24 hr UL listed rupture contained with leak detection alarm or switch

SPECIFICATION - TRANSFER SWITCH:

Bidder will supply, deliver, uncrate and mount per drawing # SK – E1 & SK-E2. (See attached)

The transfer switch is required to have all of the following:

- Indoor 225 Amp automatic transfer switch NEMA 1 enclosure, 2 pole
- Shall be service entrance rated
- Transfer time delay (adjustable)
- Retransfer time delay (adjustable)
- Under voltage sensing
- Time delay start (adjustable)
- Auto & manual retransfer switch
- Stop delay (adjustable)
- Led status
- Momentary test switch
- Automatic engine exerciser
- One (1) ea. operations / parts manual
- **"ASCO" 300 SE (service entrance rated) transfer switch is representative of type and quality desired**

SPECIFICATION – SERVICE DISCONNECT

Bidder will supply, deliver and install per attached drawing # SK – E1 & SK-E2 (see attachments)

- 100 Amp breaker disconnect, service entrance rated
- wire and cable as required
- " Cutler Hammer "is representative of type and quality required.

SPECIFICATION –CONCRETE PAD:

Bidder will supply and install a concrete pad for generator set per design & detail #SK – E1 & #SK – E3. (See attachments)

This will include:

- Excavation of existing material
- Installation and compaction of proper sub surface material
- Setting of forms and conduit
- Pouring of the concrete or approved recast pad
- Bollards as shown , see "specification – bollard"
- All other requirements to complete the pad
- Verify pad size with manufacturers recommended dimensions

SPECIFICATION –BOLLARDS:

Bidder will supply and install protective bollards for generator set per design & detail #SK – E3. (See attachment)

This will include:

- Provide & install five (5) Bollards as shown ON #SK – E3
- Bollards shall be constructed from 6" schedule 80 steel pipe
- Bollards shall be a minimum of seven (7) feet long with three (3) feet visible above finish grade
- Bollard shall be set in a 18" diameter hole by 48" deep and filled with 3500 psi concrete
- Bollard pipe shall be filled to the top and have a smooth cap finish, fill with 3500 psi concrete
- Final placement and spacing of bollards shall be approved by Cary Weatherbee

SPECIFICATION – SERVICE REPRESENTATION:

- Any generator set offered within this bid shall have a factory authorized service representative perform the initial start up and testing of thesystems,

- The manufacturer's representative shall have permanent representation in the New England region and shall perform warranty and post-warranty service at the F.O.B location of the system offered within **24 hours** of notification. Name and contact information of servicing agent shall be provided upon delivery of equipment

SPECIFICATION – TECHNICIAN REQUIREMENTS:

All technicians working on this project must be licensed for the trade they provide by the State of New Hampshire. {Electrical}

SPECIFICATION – WIRING & INSTALLATION:

- The successful bidder will be responsible to perform the installation and specification test of the generator and the transfer switch. This process will allow the bidder to test the equipment and communicate proper procedure for operation and maintenance.

- All electrical and structural work will meet all existing State and local installation codes.

- All applicable permits will be the physical and financial responsibility of the awarded bidder.

- Bidder shall be responsible for contacting dig-safe (tel # 1-800-225-4977) at least 72 hours in advance of any excavation.

- Bidder shall be physically and financially responsible for hiring a locating service to locate and mark existing state owned utilities prior to any excavation within the construction site.

- Bidder shall be physically and financially responsible for all cutting, trenching, backfilling and repair to the installation site to restore it to its pre construction condition.

SITE VISITATION:

It is highly recommended that all bidders make a tour of the building specified in this bid to acquaint themselves with the equipment and services to be performed. All bidders will sign a register stating that they made the tour.

Bidders are responsible for having ascertained pertinent local conditions, such as equipment conditions, locations, accessibility and general character of the sites knowledge of conditions affecting the work. The act of submitting a bid is to be considered full acknowledgment that the bidder inspected the site and is familiar with the conditions and requirements of these specifications. Any questions or request for changes or alterations arising from the bid or the site visitation will be submitted in writing, see "**NOTE TO BIDDERS"**

Contact **CARY WETHERBEE @ *603-764-5568*** for directions to the site or additional site visitation information. The site visitation is scheduled for **6/17/2004 @ 9:00 AM** All interested bidders shall gather in the parking lot of the F.O.B. point.

AWARD:

The bid award will be made **in total** to one bidder offering the **lowest total price** for the offer that meets or exceeds all specifications and requirements as stated.

START UP & TESTING

Scheduling of start-up and testing will occur after the generator unit has been placed and installed and will commence on a date mutually agreed upon by the New Hampshire Department of Transportation and the bidder. The scheduled start-up and testing will proceed weather permitting. This procedure will include a check for proper operation and that equipment performance meets the manufacturing specification to include a resistive load bank test at 100% of KW rating (minimum test time is 4 hrs). A factory-authorized technician shall be present during the startup and testing session. A standardized start-up checklist may be used for documentation and will be signed and dated by an agent of the State and bidder upon successful start-up test. Bidder shall incur all expenses associated with start-up responsibilities to include travel, lodging, and other expenses.

AGENCY TRAINING:

After the successful start-up and performance testing has been completed, agency training will commence in the use and maintenance of the generator system, as well as, the proper procedure for switching power sources due to power failure to include winter use. The successful bidder will also type up the proper procedure for switching to back up power and back to line power and submit it to **JON JOHNSON during the training session.** The bidder will spend up to 4 hours to assist the agency personnel in the operation and maintenance of the Generator Set and transfer system.

ACCEPTANCE:

The complete system shall be accepted by the State after satisfactory completion of the manufacturers recommended start up procedure, performance testing and agency training in the use and maintenance of the system. The warranty time frame shall commence on the date the system is accepted by the State of New Hampshire**. JON JOHNSON, DISTRICT SUPERVISOR** of NH DOT will be representing the State as a contact for scheduling generator start-up, system testing, personnel training and acceptance of the system into ownership to the State of New Hampshire. (TEL# 603-485-9526)

WARRANTY:
Successful bidder shall be required to provide a USA warranty all of the equipment awarded to include all factory recommended service and maintenance for generator and transfer switch for a period (1) of 1 year from the date the equipment is accepted by the State of New Hampshire. Warranty will also provide for a (1) one-year comprehensive warranty (no hour limitation) on the entire standby power system. The warranty shall cover 100% of parts, labor, travel, lodging, freight and expenses. **Please include a written copy of the manufacturer warranty for all relative components with the bid offer.**

Installation (Labor) Warranty shall be one (1) year from date of acceptance and shall include all labor, travel and expenses. The warranty period will begin on all equipment and installation upon the date of acceptance of the equipment by the State of New Hampshire.

INSURANCE:
Prior to award of this bid, the bidder shall furnish a Certificate of Insurance as evidence of existence of broad form Comprehensive General Liability (CGL) in minimum amount of not less than $250,000.00 per claimant, and $2,000,000.00 per incident to include fire and extended coverage in an amount not less than 80% of the whole replacement value of the property.

The bidder shall, at its sole expense, obtain said insurance and maintain in force, and shall require any sub-contractor or assignee to obtain and maintain in force, both for the benefit of the State. The certificates shall contain a clause prohibiting cancellations or modifications of the policy through 12/31/2004. The policies described above shall be the standard form employed in the State of New Hampshire, issued by underwriters acceptable to the State, and authorized to do business in the State of New Hampshire**.**

PAYMENT SCHEDULE:
After complete installation, successful start-up, testing and acceptance of a generator unit by the state, the bidder may submit an invoice and payment will be made in full per the Terms and Conditions accompanying this bid.

BID PRICES:
Bid prices shall include delivery and all other costs. Bid prices should be government and/or educationally discounted prices.

F.O.B.:
The F.O.B. shall be destination to the following delivery and installation point:

NH Department of Transportation
Shed 202
East Side Road Road.
Wentworth NH,

REQUISITION NO.: # 186095

OFFER:
Successful bidder hereby offers to sell the required items to the State of New Hampshire at the following price(s):

The unit prices and extensions indicated should be government and/or educationally discounted prices.
Successful bidder hereby offers to supply and completely install the required item(s) in complete accordance with the requirements as specified, for the total price of $_____

DELIVERY AND INSTALLATION TIME:
The successful bidder hereby agrees to accomplish delivery and **complete** installation of said equipment within _____ days after receipt of purchase order.

SPECIFICATION, SUPPORT DOCUMENTATION:
Copies of all available specified components for the representative generator model and switch have been enclosed for the bidders review, see attached.

CATERPILLAR OLYMPIAN MODEL #D20P1S, TO INCLUDE: **#4001E** AUTO START CONTROL PANEL, **#PBC3UL** (LC) BATTERY CHARGER, **#CAWB** SERIES WEATHER PROTECTIVE ENCLOSURE, **#FCUL 2** – 24 HR FUEL TANK, **#GOVE 1** ELECTRONIC GOVERNOR, **#WHL** COOLANT HEATER, LEAD ACID BATTERIES AND LOW COOLANT LEVEL SHUTDOWN PROTECTION, IS REPRESENTATIVE OF THE TYPE AND QUALITY REQUIRED. (Review attached spec. sheets)

The manufacturer and product number of your generator offer is:

_____

IF QUOTING OTHER THAN INDICATIVE MODEL, COMPLETE, DETAILED SPECIFICATIONS WILL BE INCLUDED WITH BID OFFER.

Please list make and model offered for specified transfer switch:

_____

COMPLETE, DETAILED SPECIFICATIONS WILL BE INCLUDED WITH BID OFFER

Please list make and model offered for specified Service disconnect:

_____

COMPLETE, DETAILED SPECIFICATIONS WILL BE INCLUDED WITH BID OFFER

PROJECT COMMUNICATION:
Bidder will coordinate all phases and scheduling of this project through **CARY WETHERBEE** @ 603-764-5567

NOTE TO BIDDERS:
Any request for bid clarification or specification change must be received in writing at the Bureau of Purchase and Property before 4 pm on 6/18/2004 to be considered. This will allow time to review request and reply to bidders with adequate time prior to the scheduled bid opening. Request can be faxed to: 603-271-2700 ATT: MICHAEL WALSH, or e-mailed to: mwalsh@admin.state.nh.us

BIDDER OFFER FORMAT:
THIS BID **#464** MAY HAVE BEEN DELIVERED TO YOU IN A FACSIMILE OR WEB BASED FORMAT. **BIDDERS MUST** RETURN THEIR **COMPLETE** SIGNED FAX OR HARD COPY OFFERS TO THE BUREAU OF PURCHASE AND PROPERTY BEFORE **1:30 PM ON 6/24/2004.**

FAX NUMBER 603-271-2700

Mailing address will be: NH DEPT OF ADMINISTRATIVE SVC
BUREAU OF PURCHASE AND PROPERTY
25 CAPITOL STREET, STATE HOUSE ANNEX, ROOM 102
CONCORD, NH 03301

Bid # 464, opening @ 1:30 pm on 6/9/2004

BID RESULTS:
Bid results will not be given over the telephone. Bid results will be mailed to you if you include a self-addressed envelope with the correct amount of postage on it. Bid results may also be viewed on our web site at: **http://www.admin.state.nh.us/purchasing/bids.asp**

NOTES FOR PAD DETAILS:

1. EXACT LOCATION TO BE DETERMINED IN THE FIELD. OWNER TO APPROVE LOCATION
2. REFER TO TYPICAL PAD DETAIL.
3. REFER TO RISER DIAGRAM.

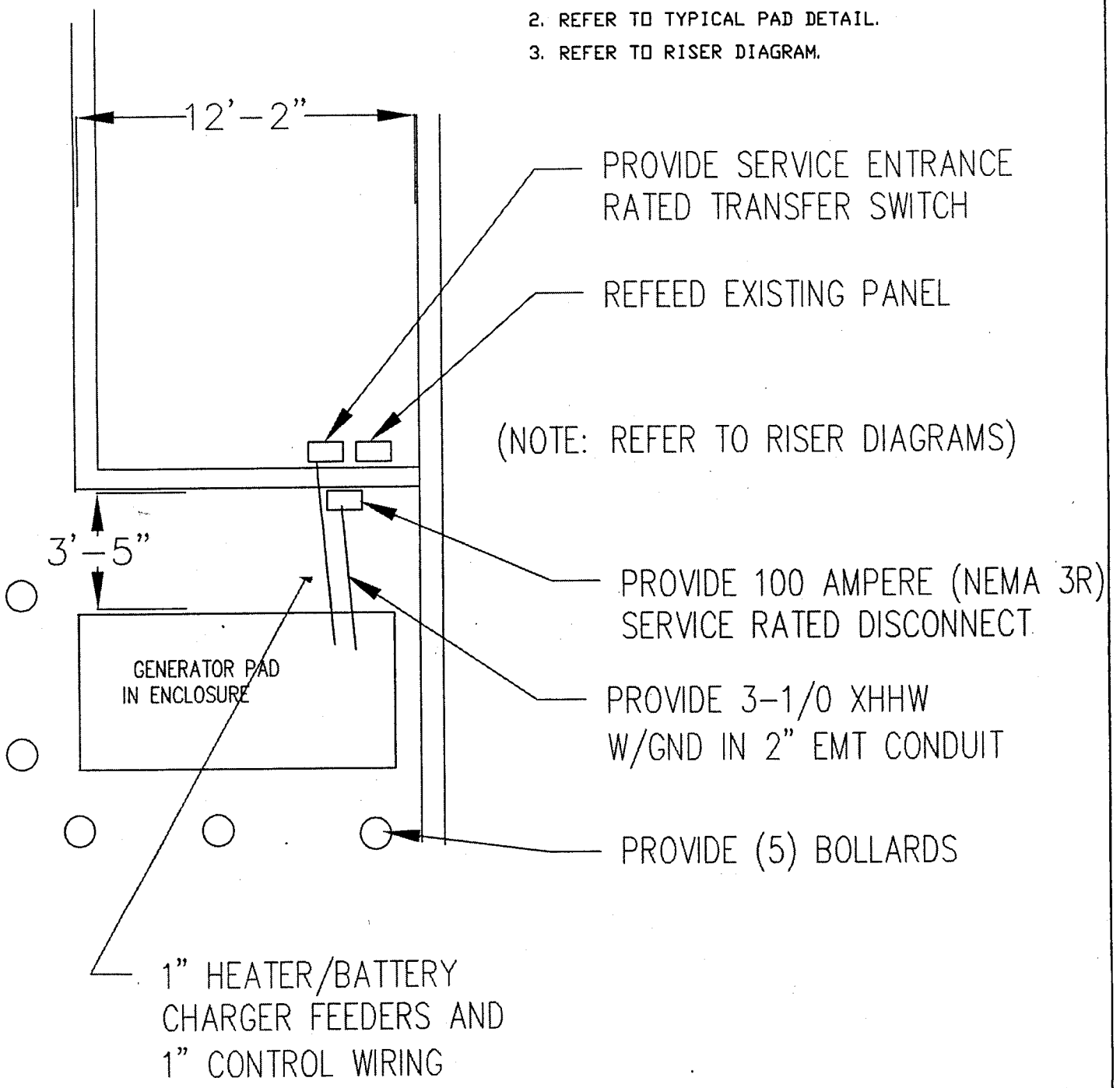

Bureau of Public Works
One Hazen Drive
Concord, NH 03302
Tel. (603) 271-3516
Fax. (603) 271-3515

NHDOT - WENTWORTH SHED #202
WENTWORTH, NEW HAMPSHIRE

GENSET PAD LOCATION DETAIL

DRAWN BY: CCS | SCALE: NONE | DATE: 05-17-04

PROJECT No.

SK-E1

REVISION: △

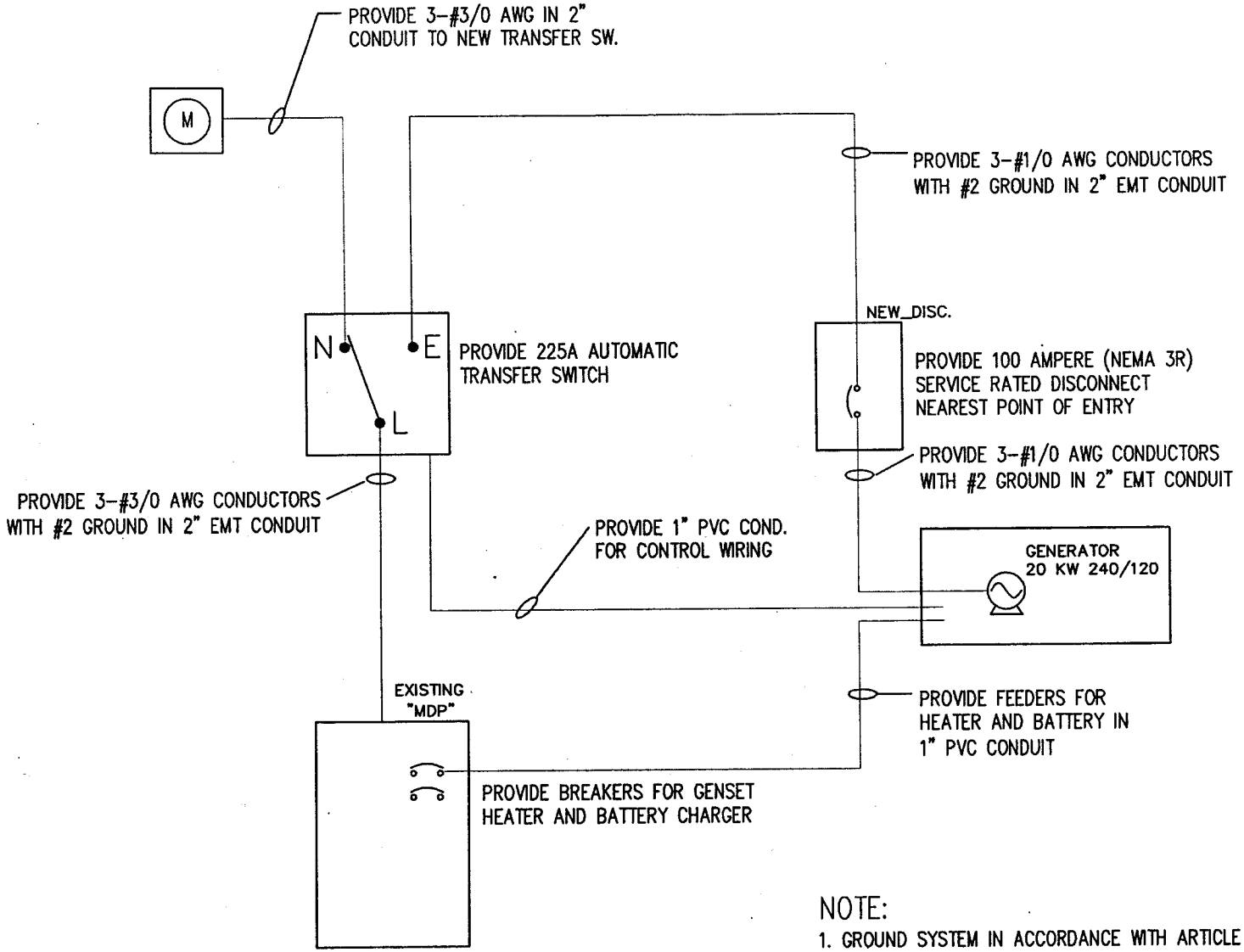

PROPOSED RISER DIAGRAM

NOTE:

1. GROUND SYSTEM IN ACCORDANCE WITH ARTICLE 250 OF THE NEC. THE GENERATOR NEUTRAL SHALL BE CONNECTED TO THE BUILDING GROUND SYSTEM THROUGH THE NEUTRAL BUS IN THE TRANSFER SWITCH.
2. ALL CONUITS OUTSIDE SHALL BE UNDERGROUND. THE CONTRACTOR IS RESPONSIBLE FOR ALL TRANCHING, BACKFILL AND REPAIR TO THE SITE.

Bureau of Public Works
One Hazen Drive
Concord, NH 03302
Tel. (603) 271-3516
Fax. (603) 271-3515

NHDOT WENTWORTH SHED #202
WENTWORTH , NEW HAMPSHIRE

GENSET - ELECTRIC RISER

DRAWN BY: CCS
SCALE: NONE
DATE: 05-17-04
REVISION: △
SK-E2
PROJECT No.

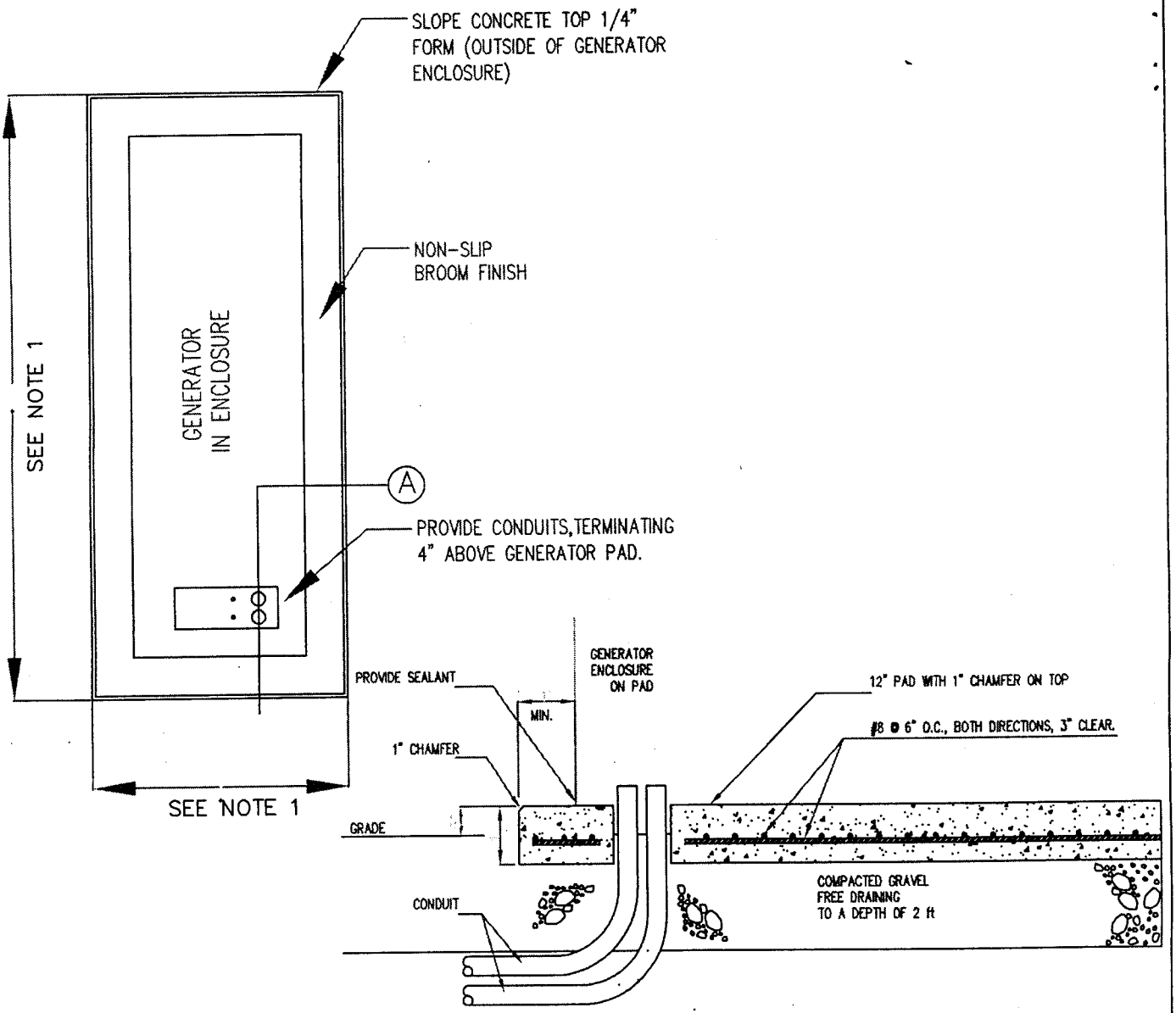

NOTES FOR PAD DETAILS:

1. VERIFY PAD SIZE WITH MANUFACTURER'S DIMENSIONS.
2. SUBMIT PAD LAYOUT TO OWNER FOR APPROVAL.
3. CONCRETE: 3000 PSI AT 28 DAYS, 3/4" MAX AGGREGATE, 5% ENTRAINED AIR, 4" SLUMP
4. REINFORCEMENT: ASTM A 615, GRADE 60
5. PROVIDE A #4/0AWG BARE COPPER GROUND RING AROUND GENERATOR PAD. THE GROUND SHALL BE BURIED 12" DEEP, MINIMUM. BRING GROUND UP TO GROUND PAD ON GENERATOR. PROVIDE TWO 3/4" EIGHT FOOT GROUND RODS AT OPPOSITE CORNERS OF PAD. CONNECTIONS SHALL BE CADWELD.

Bureau of Public Works
One Hazen Drive
Concord, NH 03302
Tel. (603) 271-3516
Fax. (603) 271-3515

NHDOT WENTWORTH SHED #202
WENTWORTH, NEW HAMPSHIRE

GENSET PAD

DRAWN BY: CCS	SCALE: NONE	DATE: 05-17-04

PROJECT No.

SK-E3

REVISION: △

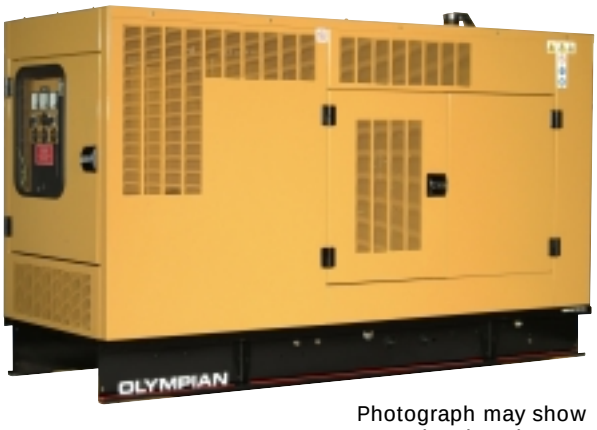

Photograph may show optional equipment

CAWB – WEATHERPROOF ENCLOSURES

These weatherproof, factory installed, enclosures incorporate internally mounted critical level silencers, matched for safety and aesthetic value on fabricated steel skidbases on diesel models. Optional UL listed tanks are available. These enclosures are of extremely rugged construction to withstand outdoor exposure to the elements of weather and rough handling common on many construction sites. They are designed on modular principles with many interchangeable components permitting on-site repair.

Note: Options FSS1, FSS2, FSS5 and FSS6 (fuel level alarms) are not available on non-UL "B Series" base tanks.

FEATURES

ROBUST/HIGHLY CORROSION RESISTANT CONSTRUCTION

- Black zinc die cast hinges tested and proven to withstand extreme conditions of corrosion
- Zinc plated or stainless steel fasteners
- Body made from steel components treated with polyester powder coating

EXCELLENT ACCESS

- Large cable entry area for installation ease
- Doors located convenient to controls and service areas
- Double doors on both sides
- Vertically hinged doors allow 180° opening rotation
- "Lift-off" doors, removable with 45° opening in confined locations
- Lube oil and coolant drains piped to exterior of enclosure and terminated with drain valves
- Hinged radiator fill cover

SECURITY AND SAFETY

- Lockable access doors with standard key utilization
- Cooling fan and battery charging alternator fully guarded
- Fuel fill can only be reached via lockable access doors (only provided when optional fuel tank is ordered)
- Exhaust silencing system totally enclosed for operator safety
- Roof outlet exhaust with sealed roof aperture and rain cap
- Stub-up cover sheets for "rodent proofing"

TRANSPORTABILITY

- Lifting points on baseframe
- Optional tested and certified single point lifting facility

OPTIONS

- PVW2 Panel Viewing Window for CAWB
- CSB2 External Emergency stop push button (red) mounted flush on exterior enclosure wall
- BLP2 Single Lift for CAWB (not available for gas models)
- FTP Integral metal fuel tank

LEHX0109-05 (09-03)

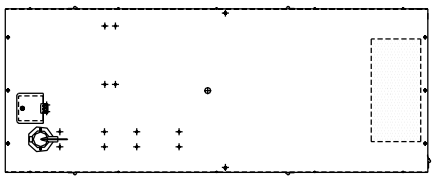

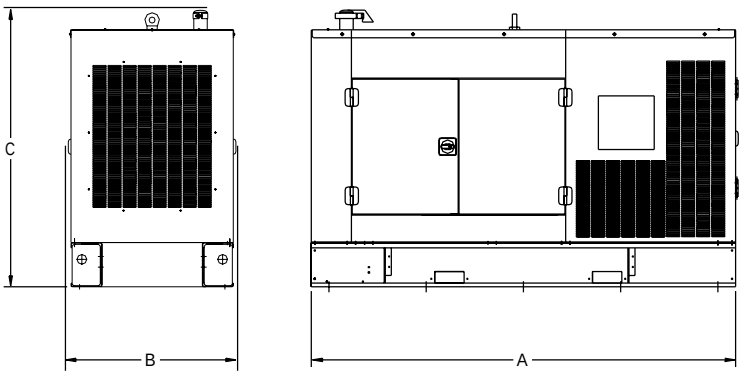

FSK SKIDBASE WITH CAWB WEATHERPROOF ENCLOSURE GENERATOR DIMENSIONS

Generator Set Model	Length A in (mm)	Width B in (mm)	Height C in (mm)	Weight* lbs (kg)
D20P1, D25P1	73.4 (1865)	36.3 (923)	59.4 (1510)	1683 (765)
D20P2, D25P2, D30P4	73.4 (1865)	36.3 (923)	59.4 (1510)	2050 (932)
D30P3	85.7 (2178)	36.3 (923)	61.2 (1555)	2341 (1062)
D40P3, D40P2	85.7 (2178)	36.3 (923)	61.2 (1555)	2385 (1082)
D50P3, D50P2	85.7 (2178)	36.3 (923)	61.2 (1555)	2530 (1148)
D60P3, D60P2	85.7 (2178)	36.3 (923)	61.2 (1555)	2619 (1188)
D75P3	85.7 (2178)	36.3 (923)	61.2 (1555)	2760 (1252)
D80P4, D100P4	102.4 (2600)	44.4 (1129)	63.8 (1637)	2999 (1360)
D90P1, D100P1	115.5 (2934)	44.4 (1128)	71.3 (1810)	4618 (2099)
D125P1, D125P2, D150P1	115.9 (3290)	44.4 (1128)	71.0 (1803)	5001 (2273)
D150P6	129.5 (3290)	51.4 (1305)	77.9 (1978)	5889 (2672)
D200P4	129.5 (3290)	51.4 (1305)	77.9 (1978)	5889 (2672)
D20P1S, D25P1S	73.4 (1865)	36.3 (923)	59.4 (1510)	1804 (820)
D20P2S, D25P2S	73.4 (1865)	36.3 (923)	59.4 (1510)	1940 (882)
D30P3S, D30P2S	85.7 (2178)	36.3 (923)	61.2 (1555)	2341 (1062)
D40P3S, D40P2S	85.7 (2178)	36.3 (923)	61.2 (1555)	2496 (1132)
D50P3S, D50P2S	85.7 (2178)	36.3 (923)	61.2 (1555)	2617 (1187)
D60P3S	85.7 (2178)	36.3 (923)	61.2 (1555)	2760 (1252)
D60P4S, D75P4S	102.4 (2600)	44.4 (1129)	63.8 (1637)	2999 (1360)
D90P4S, D100P4S	102.4 (2600)	44.4 (1129)	63.8 (1637)	2999 (1360)
D75P1S	94.7 (2406)	37.4 (948)	61.5 (1563)	2772 (1260)
D90P1S	115.5 (2934)	44.4 (1128)	71.3 (1810)	4618 (2099)
D100P1S	115.5 (2934)	44.4 (1128)	71.3 (1810)	4836 (2198)

* Net weight with lube oil and coolant, no fuel, quoted for the largest model in range.

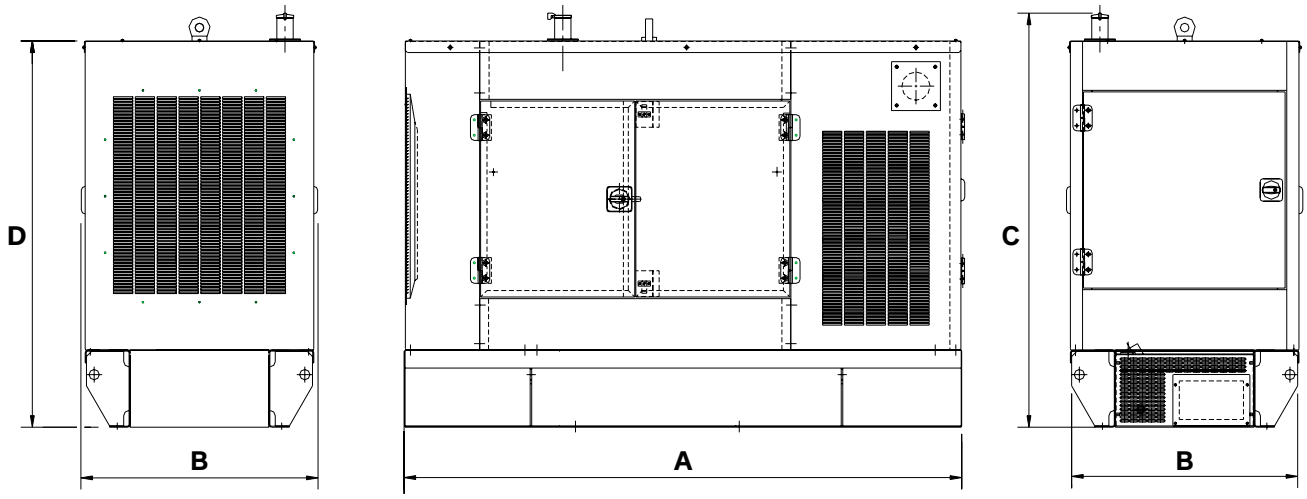

CAWB — WEATHERPROOF ENCLOSURES
DIMENSIONS AND WEIGHTS (with non-UL listed base tanks)

Generator Set Model	A in (mm)	B in (mm)	C in (mm)	D in (mm)	Fuel Capacity US Gal (L)	Weight* lb (kg)
D20P1, D25P1	73.1 (1856)	36.3 (923)	61.4 (1560)	57.1 (1450)	28.8 (109)	1750 (794)
D20P2, D25P2, D30P4	73.1 (1856)	36.3 (923)	61.4 (1560)	57.1 (1450)	28.8 (109)	2118 (961)
D30P3	85.5 (2171)	36.3 (923)	63.4 (1610)	59.1 (1502)	43.6 (165)	2321 (1053)
D40P3, D40P2	85.5 (2171)	36.3 (923)	63.4 (1610)	59.1 (1502)	43.6 (165)	2366 (1073)
D50P3, D50P2	85.5 (2171)	36.3 (923)	63.4 (1610)	59.1 (1502)	43.6 (165)	2476 (1123)
D60P3, D60P2	85.5 (2171)	36.3 (923)	63.4 (1610)	59.1 (1502)	43.6 (165)	2564 (1163)
D75P3	85.5 (2171)	36.3 (923)	63.4 (1610)	59.1 (1502)	43.6 (165)	2674 (1213)
D80P4, D100P4	102.4 (2600)	44.4 (1129)	63.8 (1637)	50.8 (1290)	79.3 (300)	3164 (1435)
D90P1, D100P1	115.5 (2934)	44.4 (1128)	73.2 (1859)	67.7 (1720)	77.9 (295)	4895 (2221)
D125P1, D125P2, D150P1	115.4 (2934)	44.4 (1128)	73.2 (1859)	67.7 (1720)	77.9 (295)	5182 (2351)
D150P6, D200P4	129.5 (3290)	51.4 (1305)	78.0 (1978)	72.9 (1852)	145.3 (550)	5834 (2647)
G30F3, G40F3, G50F3	85.2 (2165)	35.1 (890)	61.4 (1560)	56.5 (1435)	N/A	2042 (928)
G60F3, G80F3	95.2 (2415)	36.2 (920)	61.3 (1558)	56.5 (1435)	N/A	2696 (1223)
G100F3	95.2 (2415)	36.2 (920)	61.3 (1558)	56.5 (1435)	N/A	2693 (1224)
G125G1	102.4 (2600)	44.4 (1129)	64.4 (1635)	50.8 (1290)	N/A	3578 (1623)
D20P1S, D25P1S	73.1 (1856)	36.3 (923)	61.4 (1560)	57.1 (1450)	28.8 (109)	1871 (849)
D20P2S, D25P2S	73.1 (1856)	36.3 (923)	61.4 (1560)	57.1 (1450)	28.8 (109)	2008 (911)
D30P3S, D30P2S	85.5 (2171)	36.3 (923)	63.4 (1610)	59.1 (1502)	43.9 (165)	2321 (1053)
D40P3S, D40P2S	85.5 (2171)	36.3 (923)	63.4 (1610)	59.1 (1502)	43.9 (165)	2476 (1123)
D50P3S, D50P2S	85.5 (2171)	36.3 (923)	63.4 (1610)	59.1 (1502)	43.9 (165)	2564 (1163)
D60P3S	85.5 (2171)	36.3 (923)	63.4 (1610)	59.1 (1502)	43.9 (165)	2674 (1213)
D60P4S, D75P4S, D90P4S, D100P4S	102.4 (2600)	44.4 (1129)	63.8 (1637)	50.8 (1290)	79.3 (300)	3319 (1505)
D75P1S	94.7 (2406)	37.4 (948)	63.7 (1617)	59.1 (1502)	61.3 (232)	2882 (1310)
D90P1S	115.5 (2934)	44.4 (1128)	73.2 (1859)	67.7 (1720)	77.9 (295)	4800 (2177)
D100P1S	115.5 (2934)	44.4 (1128)	73.2 (1859)	67.7 (1720)	77.9 (295)	5018 (2276)
G30F3S, G35F3S	85.2 (2165)	35.1 (890)	61.4 (1560)	56.5 (1435)	N/A	2042 (928)
G45F3S	85.2 (2165)	35.1 (890)	61.4 (1560)	56.5 (1435)	N/A	2152 (978)
G55F3S	95.2 (2415)	36.2 (920)	61.3 (1558)	56.5 (1435)	N/A	2586 (1173)
G75F3S	95.2 (2415)	36.2 (920)	61.3 (1558)	56.5 (1435)	N/A	2696 (1223)
G100F3S	95.2 (2415)	36.2 (920)	61.3 (1558)	56.5 (1435)	N/A	3089 (1404)

* Net weight with lube oil and coolant, no fuel, quoted for the largest model in range.

LEHX0109-05 (09-03)

OLYMPIAN™

LC 3.5 amp
Battery Charger

FC 10 amp
Battery Charger

UL LISTED BATTERY CHARGERS

PBC3UL (LC), PBC10UL (FC)

Olympian UL battery chargers LC (3.5 amp) and FC (10 amp) are factory mounted and offer accurate, completely automatic charging of lead-acid batteries. The output voltage automatically adjusts to changing input, load and ambient conditions. This prevents battery over-charging and consequent loss of battery electrolyte.

FEATURES

- Automatic 2-rate float/ equalize charging without manual switching. Quickly restores charge after power failures and prevents over charging
- Temperature compensated to eliminate a major cause of premature battery failure
- Current limited to protect from charger overload
- Rugged Aluminium Housing gives modern appearance and corrosion protection

SPECIFICATION

- 120 Volt, 60 Hz input
- 12 or 24 Volt DC output. Float voltage adjustable from 100% to 120%. Boost voltage is fixed at approximately 5% above float voltage for LC 3.5 amp chargers and adjusts to 15% above float voltage for FC 10 amp chargers
- Output Voltage Regulation ± 1% from no load to full load
- After battery discharge or AC failure, the charger operates in the high-rate constant current mode until the battery voltage rises to the pre-set Boost level. Once this level is reached, the charger operates in constant voltage boost mode until the battery's current acceptance falls to less than 80% (for LC 3.5 amp chargers) or 70% (for FC 10 amp chargers) of the charger's rated output. At this point, the charger reverts to the lower float voltage, where it remains until another battery discharge or AC failure
- Current Limiting and Overload Protection — Electronically current limited at 110% of rated output. AC and DC fuses
- Adjustment — Internal adjustment for float voltage. Internal adjustment for boost voltage on FC 10 amp chargers (LC 3.5 amp chargers have a boost voltage fixed at 5% above float voltage)
- Indicators — DC ammeter: 2.5" (63 mm) scale. DC voltmeter: 2.5" (63 mm) scale (FC 10 amp chargers only)
- Ambient — Operating temperature: 14° F (–10° C) to 122° F (50° C). Humidity: 5% to 95% non-condensing
- Mechanical — Housing: Clear-anodized aluminum. Mounted to the rear of the Control Panel
- Approvals — UL Listed

LEHX0439-05 (08-03)

UL LISTED BATTERY CHARGERS LC/FC DIMENSIONS AND WEIGHTS

Option Code	Output		Input		Weight	Dimensions		
	Amps	Volts	Hz	Volts		Width	Depth	Height
PBC3UL	3.5	12/24	60	120	7 lb (3 kg)	5.5" (140 mm)	5.0" (127 mm)	11.0" (279 mm)
PBC10UL	10	12/24	60	120	12 volt: 17 lb (8 kg) 24 volt: 26 lb (12 kg)	11.0" (279 mm)	5.0" (127 mm)	11.0" (279 mm)

www.CAT-ElectricPower.com

© 2003 Caterpillar
All rights reserved.
Printed in U.S.A.

Materials and specifications are subject to change without notice.
The International System of Units (SI) is used in this publication.

UL LISTED FUEL TANKS

FCUL1 — 12 HR

FCUL2 — 24 HR

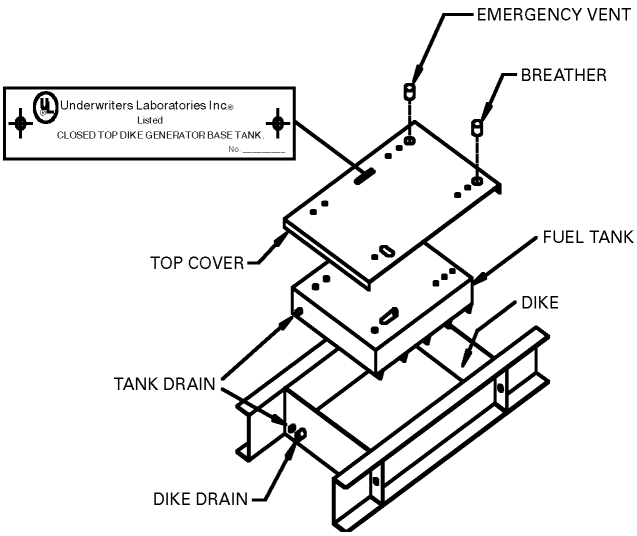

CLOSED TOP DIKED SKID BASE FUEL TANK

The generator set skid base contains an integral, UL listed, double walled, steel fuel storage tank with diked rupture basin for the containment of fuel resulting from a tank leak or rupture. The rupture basin is integrally vented and has a closed top to prevent the ingress of precipitation, debris or other elements. The tank is leak tested to 3 psi and pressure tested to 15 psi. The base tank is UL142 listed for Steel Above Ground Tanks for Flammable and Combustible Liquids under the "Special Purpose Tanks" category. They are intended for installation in accordance with the Flammable and Combustible Liquids Code, NFPA 30 of the National Fire Protection Association.

FEATURES

CONSTRUCTION

- Manufactured entirely from 8 gauge (4 mm) steel
- Continuously welded seams
- Formed steel channel type side beams
- Unitized load bearing structure
- Integral lifting points
- Corrosion resistant precoat
- Listed to UL142
- Closed top diked base tank

AESTHETICS

- Continuous high gloss finish
- Polyester powder composite
- Extremely durable and corrosion resistant

DESIGN FEATURES

- Unique integral base and tank design
- Developed specifically for open or enclosed generator sets
- Containment capacity for fuel
- Internal baffles arranged to prevent recirculation of heated return fuel
- Brass composite 2" filler cap
- Mechanical fuel gauge
- Fuel capacities to provide typically 12 and 24 hour standby operation
- Primary vent with breather
- Vent located accessible for adapting to remote venting
- Venting areas to UL142 specifications
- Leak detection switch
- Emergency vent for main tank
- Weatherproof diked containment basin
- External NPT drain fittings for fuel tank and containment basin
- Removable base-end cover plate encloses stub-up area when used with enclosures

LEHX0470-04 (10-03)

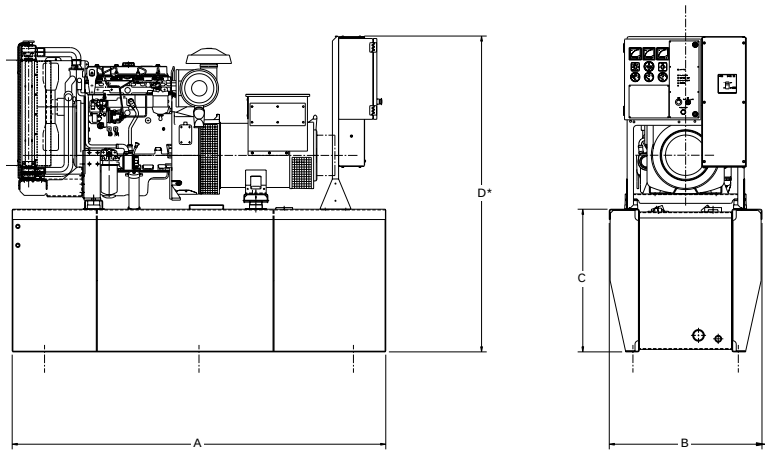

OPEN GENERATOR SETS
DIMENSIONS AND WEIGHTS WITH UL LISTED FUEL TANK

Generator Set Model	Working Tank Capacity, US gallons (liters)		Generator Dimensions, in (mm)						Weight lb (kg)	
			Length	Width	Height, 12 hr		Height, 24 hr			
	12 hr	24 hr	A	B	C	D*	C	D*	12 hr	24 hr
D13P2	NA	52.3 (198)	74.8 (1900)	35.4 (900)	NA	NA	10.4 (265)	55.2 (1403)	NA	1492 (677)
D18P2	NA	52.3 (198)	74.8 (1900)	35.4 (900)	NA	NA	10.4 (265)	55.2 (1403)	NA	1627 (738)
D20P4	NA	52.3 (198)	74.8 (1900)	35.4 (900)	NA	NA	10.4 (265)	55.2 (1403)	NA	1656 (751)
D20P1, D25P1	NA	62.1 (235)	73.0 (1854)	35.0 (890)	NA	NA	20.1 (510)	58.4 (1484)	NA	1810 (821)
D20P2, D25P2, D20P2S, D25P2S, D30P4	NA	62.1 (235)	73.0 (1854)	35.1 (890)	NA	NA	20.1 (510)	58.4 (1484)	NA	1980 (898)
D30P3	74.2 (281)	147.4 (558)	85.7 (2177)	35.1 (890)	24.2 (615)	63.8 (1622)	32.7 (830)	72.3 (1837)	2127 (965)	2663 (1208)
D40P3, D40P2	74.2 (281)	147.4 (558)	85.7 (2177)	35.1 (890)	24.2 (615)	63.8 (1622)	32.7 (830)	72.3 (1837)	2249 (1020)	2784 (1263)
D50P3, D60P3, D50P2, D60P2	74.2 (281)	147.4 (558)	85.7 (2177)	35.1 (890)	24.2 (615)	63.8 (1622)	32.7 (830)	72.3 (1837)	2403 (1090)	2939 (1333)
D75P3, D75P2	74.2 (281)	147.4 (558)	85.7 (2177)	35.1 (890)	24.2 (615)	63.8 (1622)	32.7 (830)	72.3 (1837)	2491 (1130)	3027 (1373)
D80P4, D100P4	98.3 (372)	193.7 (733)	94.6 (2404)	36.1 (918)	23.4 (595)	64 (1625)	34.3 (870)	74.5 (1890)	TBA	TBA
D90P1–D100P1	98.3 (372)	193.7 (733)	94.6 (2404)	36.1 (918)	23.4 (595)	65.9 (1675)	34.3 (870)	76.9 (1954)	3640 (1651)	3602 (1634)
D125P1, D125P2, D150P1	147.2 (557)	300.1 (1136)	115.5 (2934)	43.2 (1098)	23.2 (590)	66.3 (1684)	32.3 (820)	75.4 (1914)	3880 (1760)	4334 (1966)
D150P6	231 (874)	381.5 (1441)	129.7 (3294)	51.2 (1300)	20.7 (527)	74.5 (1893)	30.7 (780)	84.5 (2146)	5307 (2407)	5245 (2379)
D200P4	231 (874)	381.5 (1441)	129.7 (3294)	51.2 (1300)	20.7 (527)	74.5 (1893)	30.7 (780)	84.5 (2146)	5638 (2557)	5790 (2626)
D13P2S	NA	52.3 (198)	74.8 (1900)	35.4 (900)	NA	NA	10.4 (265)	55.2 (1402)	NA	1492 (677)
D20P1S, D25P1S,	NA	62.1 (235)	73.0 (1854)	35.0 (890)	NA	NA	20.1 (510)	58.4 (1484)	NA	1835 (832)
D30P3S, D40P3S, D30P2S, D40P2S	74.2 (281)	147.4 (558)	85.7 (2177)	35.1 (890)	24.2 (615)	63.9 (1622)	32.7 (830)	72.4 (1838)	2403 (1090)	2939 (1333)
D50P3S, D50P2S, D60P3S	74.2 (281)	147.4 (558)	85.7 (2177)	35.1 (890)	24.2 (615)	63.9 (1622)	32.7 (830)	71.3 (1808)	2601 (1180)	3137 (1423)
D60P4S–D75P4S	98.3 (372)	193.7 (733)	94.6 (2404)	36.1 (918)	23.4 (595)	64 (1625)	34.3 (870)	74.5 (1890)	TBA	TBA
D75P1S	98.3 (372)	193.7 (733)	94.6 (2404)	36.1 (918)	23.4 (595)	65.9 (1675)	34.2 (870)	76.9 (1954)	3124 (1417)	3499 (1587)
D90P1S–D100P1S	147.2 (557)	300.1 (1136)	115.5 (2934)	43.2 (1098)	23.2 (590)	65.9 (1675)	32.3 (870)	75.0 (1904)	3865 (1753)	4198 (1904)
D90P4S–D100P4S	98.3 (372)	193.7 (733)	94.6 (2404)	36.1 (918)	23.4 (595)	64 (1625)	34.3 (870)	74.5 (1890)	TBA	TBA

* “D” dimension is highest point on generator set and may be to either top of control panel or top of radiator depending upon model.
Weight with lube oil and coolant

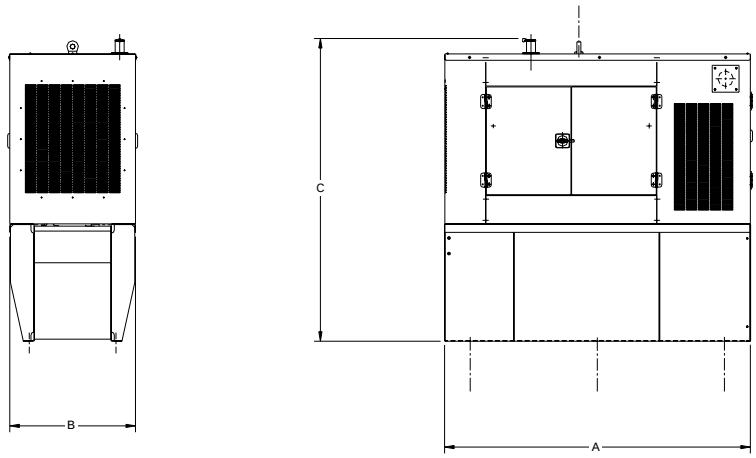

WEATHERPROOF ENCLOSED GENERATOR SETS WITH CAW ENCLOSURE DIMENSIONS AND WEIGHTS WITH UL LISTED FUEL TANK

Generator Set Model	Working Tank Capacity, US gallons (liters)		Generator Dimensions, in (mm)				Weight lb (kg)	
			Length A	Width B	Height, 12 hr C	Height, 24 hr C		
	12 hr	24 hr					12 hr	24 hr
D20P1, D25P1,	NA	64.7 (245)	73.0 (1854)	35.7 (906)	NA	69.7 (1770)	NA	2197 (997)
D20P2, D25P2, D30P4	NA	64.7 (245)	73.0 (1854)	35.7 (906)	NA	69.7 (1770)	NA	2458 (1115)
D30P3	77.1 (292)	152.2 (576)	85.2 (2165)	36.2 (920)	75.8 (1926)	84.3 (2141)	2542 (1153)	3078 (1396)
D40P3, D40P2	77.1 (292)	152.2 (576)	85.2 (2165)	36.2 (920)	75.8 (1926)	84.3 (2141)	2663 (1208)	3199 (1451)
D50P3, D60P3, D50P2, D60P2	77.1 (292)	152.2 (576)	85.2 (2165)	36.2 (920)	75.8 (1926)	84.3 (2141)	2817 (1278)	3353 (1521)
D75P3	77.1 (292)	152.2 (576)	85.2 (2165)	36.2 (920)	75.8 (1926)	84.3 (2141)	2906 (1318)	3441 (1561)
D90P1, D100P1	102 (386)	199.5 (755)	94.6 (2404)	37.3 (948)	74.4 (1908)	86.0 (2183)	4114 (1866)	4076 (1849)
D125P1, D125P2	151.7 (574)	307.8 (1165)	115.4 (2934)	43.4 (1102)	86.3 (2191)	93.7 (2380)	4398 (1995)	4852 (2201)
D150P1	151.7 (574)	307.8 (1165)	115.4 (2934)	43.4 (1102)	86.3 (2191)	93.7 (2380)	4520 (2050)	4974 (2256)
D150P6	238.8 (904)	391.2 (1481)	129.7 (3294)	51.4 (1305)	84.8 (2155)	94.8 (2408)	5549 (2517)	5995 (2719)
D200P4	238.8 (904)	391.2 (1481)	129.7 (3294)	51.4 (1305)	84.8 (2155)	94.8 (2408)	5789 (2626)	6276 (2847)
D20P1S, D25P1S,	NA	245 (64.7)	73.0 (1854)	35.7 (906)	NA	69.7 (1770)	NA	2198 (997)
D20P2S, D25P2S	NA	245 (64.7)	73.0 (1854)	35.7 (906)	NA	69.7 (1770)	NA	2459 (1115)
D30P3S, D40P3S, D30P2S, D40P2S	77.1 (292)	152.2 (576)	85.2 (2165)	36.2 (920)	75.8 (1926)	84.3 (2141)	2817 (1278)	3353 (1521)
D50P3S, D60P3S, D50P2S, D60P2S	77.1 (292)	152.2 (576)	85.2 (2165)	36.2 (920)	75.8 (1926)	84.3 (2141)	3016 (1368)	3552 (1611)
D75P1S, D75P2S	102 (386)	199.5 (755)	94.6 (2404)	37.3 (948)	74.4 (1908)	86.0 (2183)	3598 (1632)	3973 (1802)
D90P1S–D100P1S,	151.7 (574)	307.8 (1165)	115.4 (2934)	43.4 (1128)	86.3 (2191)	93.7 (2380)	4520 (2050)	4855 (2202)

Weight with lube oil and coolant

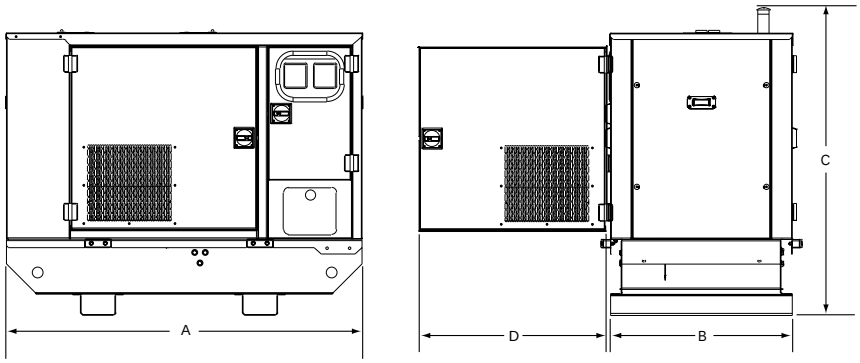

SOUND ATTENUATED ENCLOSED GENERATOR SETS WITH CAL ENCLOSURE DIMENSIONS AND WEIGHTS WITH FUEL TANK

Generator Set Model	Tank Capacity, US gallons (liters)		Generator Dimensions, in (mm)				Weight lb (kg)	
			Length	Width	Height, 12 hr	Height, 24 hr		
	12 hr	24 hr	A	B	C	C	12 hr	24 hr
D13P2	NA	45 (170)	66.3 (1684)	33.9 (860)	NA	58.4 (1485)	NA	1442 (654)
D18P2	NA	45 (170)	66.3 (1684)	33.9 (860)	NA	58.4 (1485)	NA	1605 (728)
D20P4	NA	45 (170)	66.3 (1684)	33.9 (860)	NA	58.4 (1485)	NA	1605 (728)
D13P2S	NA	45 (170)	66.3 (1684)	33.9 (860)	NA	58.4 (1485)	NA	1422 (654)
D17P2S	NA	45 (170)	66.3 (1684)	33.9 (860)	NA	58.4 (1485)	NA	1605 (728)
D20P4S	NA	45 (170)	66.3 (1684)	33.9 (860)	NA	58.4 (1485)	NA	1605 (728)

Weight with lube oil and coolant

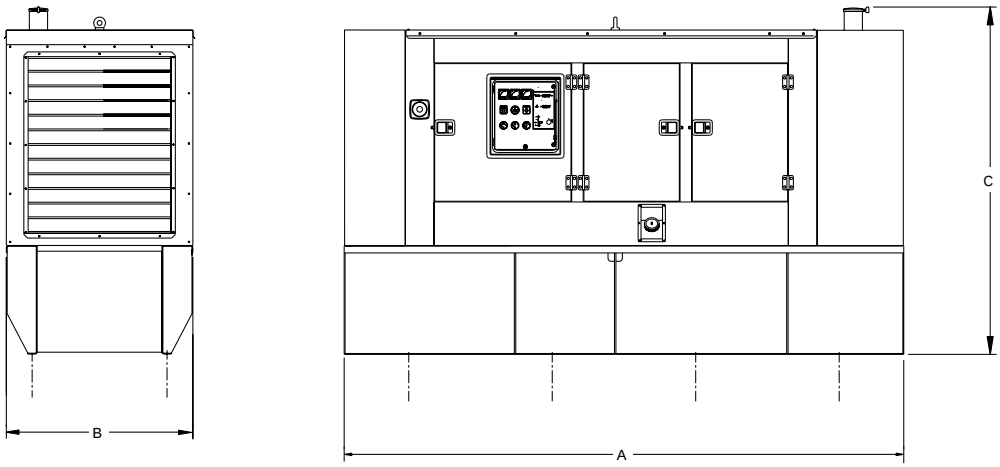

SOUND ATTENUATED ENCLOSED GENERATOR SETS WITH CAE ENCLOSURE DIMENSIONS AND WEIGHTS WITH UL LISTED FUEL TANK

Generator Set Model	Tank Capacity, US gallons (liters)		Generator Dimensions, in (mm)				Weight lb (kg)	
			Length	Width	Height, 12 hr	Height, 24 hr		
	12 hr	24 hr	A	B	C	C	12 hr	24 hr
D125P1, D125P2	200.0 (757)	392.3 (1485)	153.5 (3900)	51.2 (1300)	81.2 (2062)	93.4 (2371)	5279 (2395)	5732 (2601)
D150P1	200.0 (757)	392.3 (1485)	153.5 (3900)	51.2 (1300)	81.2 (2062)	93.4 (2371)	5402 (2450)	5856 (2656)
D150P6	200.0 (757)	392.3 (1485)	153.5 (3900)	51.2 (1300)	81.2 (2062)	93.4 (2371)	5418 (2457)	8335 (3537)
D200P4	200.0 (757)	392.3 (1485)	153.5 (3900)	51.2 (1300)	81.2 (2062)	93.4 (2371)	5748 (2607)	7689 (3487)

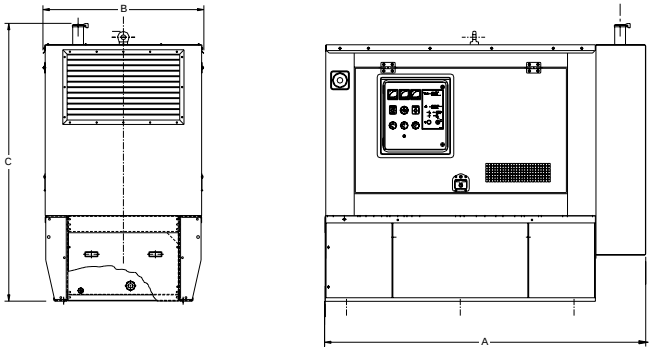

SOUND ATTENUATED ENCLOSED GENERATOR SETS WITH CAE ENCLOSURE DIMENSIONS AND WEIGHTS WITH UL LISTED FUEL TANK

Generator Set Model	Tank Capacity, US Gallons (liters)		Generator Dimensions, in (mm)				Weight lb (kg)	
			Length	Width	Height, 12 hr	Height, 24 hr		
	12 hr	24 hr	A	B	C	C	12 hr	24 hr
D20P1, D25P1	NA	59.2 (224)	82.4 (2092)	37.4 (950)	NA	67.3 (1710)	NA	1712.5 (777)
D30P3	NA	112.3 (425)	88.9 (2258)	43.3 (1100)	NA	76.7 (1948)	NA	3518 (1596)
D40P3, D40P2	NA	112.3 (425)	88.9 (2258)	43.3 (1100)	NA	76.7 (1948)	NA	3640 (1651)
D50P3, D60P3, D50P2, D60P2	NA	112.3 (425)	88.9 (2258)	43.3 (1100)	NA	76.7 (1948)	NA	3794 (1721)
D75P3	NA	112.3 (425)	88.9 (2258)	43.3 (1100)	NA	76.7 (1948)	NA	3882 (1761)
D80P4, D100P4	72.1 (273)	224.3 (849)	110.4 (2805)	43.5 (1104)	68.2 (1732)	85.5 (2172)	TBA	TBA
D90P1, D100P1	72.1 (273)	224.3 (849)	110.4 (2805)	43.5 (1104)	68.2 (1732)	85.5 (2172)	4395 (1994)	5276 (2394)
D20P1S, D25P1S,	NA	59.2 (224)	82.4 (2092)	37.4 (950)	NA	67.3 (1710)	NA	1900 (862)
D20P2, D25P2, D30P4, D20P2S, D25P2S	NA	59.2 (224)	82.4 (2092)	37.6 (955)	NA	72.3 (1836)	NA	2528 (1147)
D30P3S, D40P3S, D30P2S, D40P2S	NA	112.3 (425)	88.9 (2258)	43.3 (1100)	NA	76.7 (1948)	NA	3794 (1721)
D50P3S, D60P3S, D50P2S	NA	112.3 (425)	88.9 (2258)	43.3 (1100)	NA	76.7 (1948)	NA	3991 (1811)
D75P1S, D90P1S	72.1 (273)	224.3 (849)	110.4 (2805)	43.5 (1104)	68.2 (1732)	85.5 (2172)	4670 (2119)	5552 (2519)
D60P4S, D75P4S, D90P4S, D100P4S	72.1 (273)	224.3 (849)	110.4 (2805)	43.5 (1104)	68.2 (1732)	85.5 (2172)	TBA	TBA
D100P1S	200 (757)	392 (1485)	153.5 (3900)	51.2 (1300)	83.4 (2117)	95.8 (2433)	6200 (2813)	6617 (3002)

Weight with lube oil and coolant

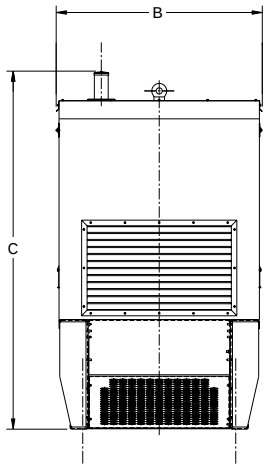

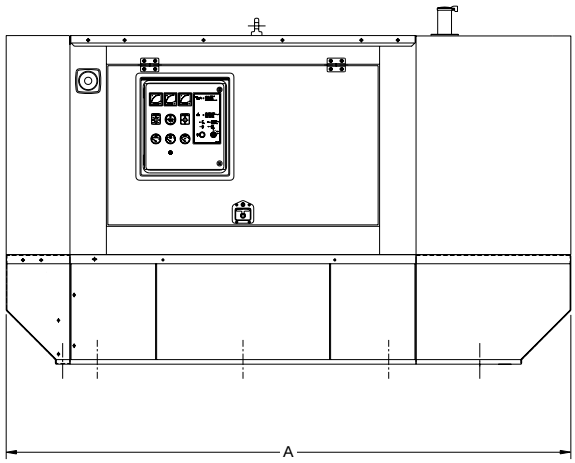

SUPER SOUND ATTENUATED ENCLOSED GENERATOR SETS WITH CAS ENCLOSURE DIMENSIONS AND WEIGHTS WITH UL LISTED FUEL TANK

Generator Set Model	Tank Capacity, US gallons (liters)		Generator Dimensions, in (mm)				Weight lb (kg)	
			Length A	Width B	Height, 12 hr C	Height, 24 hr C		
	12 hr	24 hr					12 hr	24 hr
D20P1, D25P1,	NA	59.2 (224)	112.2 (2850)	37.4 (950)	NA	67.3 (1710)	NA	3374 (1531)
D30P3	NA	112.3 (425)	122.1 (3100)	43.5 (1104)	NA	77.2 (1961)	NA	4243 (1925)
D40P3, D40P2	NA	112.3 (425)	122.1 (3100)	43.5 (1104)	NA	77.2 (1961)	NA	4365 (1980)
D50P3, D60P3, D50P2, D60P2	NA	112.3 (425)	122.1 (3100)	43.5 (1104)	NA	77.2 (1961)	NA	4519 (2050)
D75P3	NA	112.3 (425)	122.1 (3100)	43.5 (1104)	NA	77.2 (1961)	NA	4608 (2090)
D90P1, D100P1	72.1 (273)	224.3 (849)	151.8 (3855)	43.5 (1104)	68.0 (1728)	85.5 (2172)	5591 (2528)	5714 (2593)
D20P1S, D25P1S	NA	59.2 (224)	112.2 (2850)	37.4 (950)	NA	67.3 (1710)	NA	3440 (1561)
D20P2, D25P2, D30P4 D20P2S, D25P2S	NA	59.2 (224)	112.1 (2850)	37.5 (954)	NA	71.9 (1827)	NA	3255 (1477)
D30P2S, D40P2S, D30P3S, D40P3S	NA	112.3 (425)	122.1 (3100)	43.5 (1104)	NA	77.2 (1961)	NA	4519 (2050)
D50P3S, D60P3S	NA	112.3 (425)	122.1 (3100)	43.5 (1104)	NA	77.2 (1961)	NA	4718 (2140)
D75P1S, D90P1S	72.1 (273)	224.3 (849)	151.8 (3855)	43.5 (1104)	68.0 (1728)	85.5 (2172)	5946 (2698)	6032 (2737)
D100P1S	72.1 (273)	224.3 (849)	151.8 (3855)	43.5 (1104)	68.2 (1732)	85.5 (2172)	5946 (2698)	6032 (2737)

Weight with lube oil and coolant

www.CAT-ElectricPower.com

© 2003 Caterpillar
All rights reserved.
Printed in U.S.A.

Materials and specifications are subject to change without notice.
The International System of Units (SI) is used in this publication.

LEHX0470-04 (10-03)

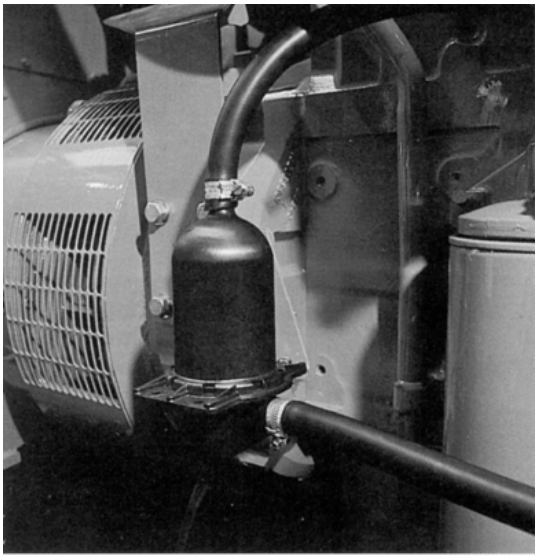

COOLANT HEATER WHL (110–120 V) OR WHH (208–240 V)

Appropriate when the generator set is to be sited in a low ambient environment the heater maintains the engine coolant at a temperature (typically 100°F (38°C)) which facilitates rapid starting and load acceptance. The heater assembly uses UL compliant components (to UL1030) and has CSA certification which is to both CSA & UL standards.

The heater itself is powered by a 110–120 volt or 208–240 volt AC auxiliary supply protected by a safeguard breaker inside the main control panel. A thermostatic controller is included to regulate the output temperature to within safe limits. When the generator set is not running the heater is automatically connected to the AC supply through a power relay mounted in the control panel. Upon receiving a start signal the AC supply is automatically disconnected by the power relay and automatically reconnected when the start signal is removed and the engine has stopped.

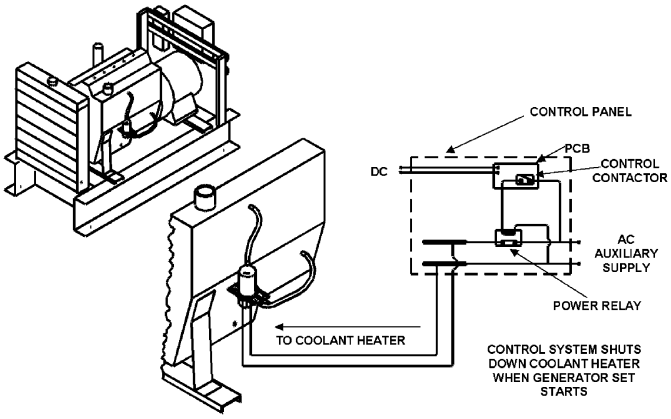

FEATURES

- Molded from Polyphenylene Sulfide
- Rust free, corrosion resistant with exceptional tensile strength
- Vibration and shock tested to extreme limits to ensure durability
- Compatible with all coolant additives
- Incoloy element for longer service life

110–120 V [WHL]

3 Phase Generator Set Models Diesel	3 Phase Generator Set Models Gas	Nominal Coolant Heater Power Consumption (Watts)
D8L1-D25LH1, D20L2	G12U3 – G25UH3	500
D20P1 – D75P3, D20P2 – D75P2	G20F3 – G25F3	1000
D90P1 – D150P1, D100P2 – D125P2	G30F3 – G100F3	1500
D150P4 – D230P4	NA	1800
Single Phase Generator Set Models Diesel	**Single Phase Generator Set Models Gas**	**Nominal Coolant Heater Power Consumption (Watts)**
D8L1S – D24LH1S, D20L2S	G10U3S – G25UH3S	500
D20P1S – D60P3S, D20P2S – D60P2S	G20F3S – G25F3S	1000
D75P1S – D100P1S, D75P2S – D100P2S	G30F3S – G75F3S	1500

208–240 V [WHH]

3 Phase Generator Set Models Diesel	3 Phase Generator Set Models Gas	Nominal Coolant Heater Power Consumption (Watts)	
		208 Volts	240 Volts
D8L1-D25LH1, D20L2	NA	375	500
D20P1 – D75P3, D20P2 – D75P2	NA	750	1000
D90P1 – D150P1, D100P2 – D125P2	G30F3 – G100F3	1125	1500
D150P4 – D230P4	NA	1500	2000
Single Phase Generator Set Models Diesel	**Single Phase Generator Set Models Gas**	**Nominal Coolant Heater Power Consumption (Watts)**	
		208 Volts	**240 Volts**
D8L1S – D24LH1S, D20L2S	NA	375	500
D20P1S – D60P3S, D20P2S – D60P2S	NA	750	1000
D75P1S – D100P1S, D75P2S – D100P2S	G30F3S – G75F3S	1125	1500

www.CAT-ElectricPower.com

© 2002 Caterpillar
All rights reserved.
Printed in U.S.A.

Materials and specifications are subject to change without notice.
The International System of Units (SI) is used in this publication.

LEHX0484-03 (09-02)

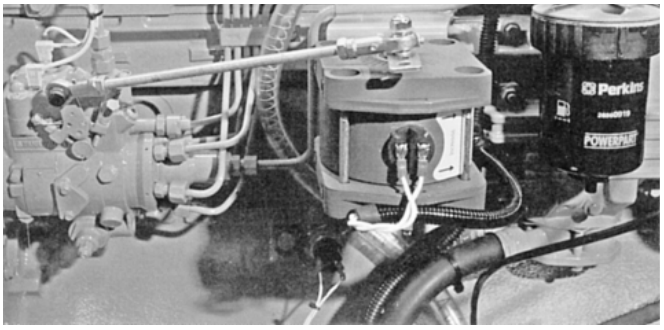

GOVE1 – ELECTRONIC GOVERNOR

The standard mechanical governor regulates the steady state generator set speed within ± 0.8% with a speed droop from no load to full load of 4%.

Fitting an electronically governed actuator improves the steady state speed to within ±0.25% to provide isochronous frequency regulation typically required when supplying electronic or other non-linear loads.

GOVE1 can be adjusted to have either isochronous or a drooping characteristic. Models D150P4, D200P4 have electronic governing fitted as standard. For synchronizing a droop engine control module (Option GOVE3) is available.

GOVE1

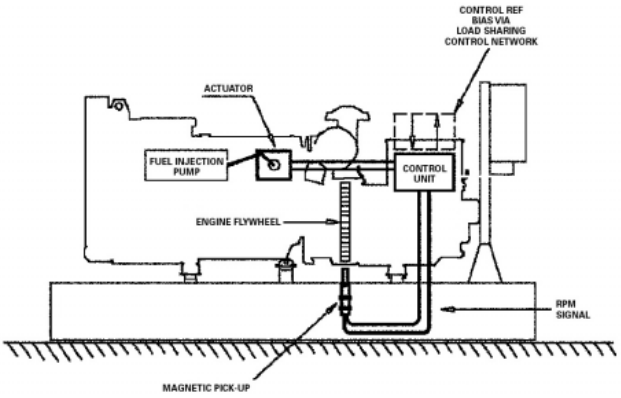

www.CAT-ElectricPower.com

© 2002 Caterpillar
All rights reserved.
Printed in U.S.A.

Materials and specifications are subject to change without notice.
The International System of Units (SI) is used in this publication.

LEHX0487-03 (09-02)

LEAD ACID STARTING BATTERIES

The battery is cooled to –18°C (0°F) and discharged at current indicated, the battery voltage must be 7.2 volts or above after 30 seconds.

Reserve Capacity is the time in minutes which the battery, at normal ambient temperature, can supply a current of 25 amps before the voltage falls to 10.5 volts.

GENERATING SET / BATTERY SPECIFICATION GUIDE

Diesel Models	Gas Models	Volts	Battery Type	No. of Batteries	Cell Assembly	Type of Terminal
D8L1-D25LH1 D8L1S-D24LH1S D20P1-D75P3, D20P2-D75P2 D20P1S-D60P3S, D20P2S-D60P2S	G12U3-G25UH3, G10U3S-G25UH3S G20F3-G50F3 G20F3S-G45F3S	12	440L5	1	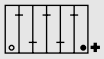	
D90P1-D150P1 D100P2-D125P2 D75P1S-D100P1S D75P2S-D100P2S	G50F3-G100F3 G55F3S, G75F3S	12	6ME10	1	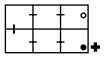	
D150P4-D200P4	na	24	9OOCD	2	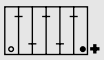	

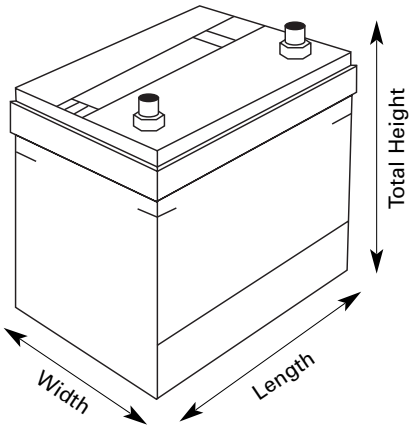

BATTERY SPECIFICATIONS (PER BATTERY)

	Dimensions							
Battery Type	Length (inch)	Width (inch)	Height (inch)	Weight (lbs)	Cold Cranking Amps/Din	Amp Hours	Cold Crankin Amps/SAE	Reserve Capacity
440L5	13.9	6.9	7.5	52.9	440	92	780	170
6ME10	20.0	6.9	8.6	76.1	500	120	890	220
9OOCD	20.4	10.7	9.5	128	900	220	1620	390

CCA/DIN
This is the current drawn from the battery for 30 seconds at -18°C before the battery voltage drops below 9 volts.

Ahr
The test is carried out at 25°C and the battery is discharged at a current, which is set, so that the voltage falls to 10.5 volts after 20 hours. The Ampere-hours rating is the test current multiplied by the time.

CCA / SAE - Society of Automotive Engineers;
This is the High Current test carried out in line with the Society of Automotive Engineers specification in which the battery is cooled to -18°C (0°F) and discharged at the current indicated.
The requirement is for the battery voltage after 30 seconds to be 7.2 volts or above.

RC - Reserve Capacity;
These capacity test shows the time in minutes, which the battery at 25°C can supply, a current of 25 amps before the voltage falls to 10.5 volts.
This is an indication of the period during which the battery can provide sufficient power to maintain the headlights and normal controls in the event of a failure of the alternator.

© 2002 Caterpillar
All rights reserved.
Printed in U.S.A.

LEHX0492-02 (09-02)

Materials and specifications are subject to change without notice.
The International System of Units (SI) is used in this publication.

4001E AUTOSTART CONTROL PANEL

The 4001E control panel is designed for automatic starting and stopping of the generator set with 2 wire remote contacts as well as manual starting and stopping. The panel provides engine and generator instrumentation for volts, amps, combined frequency meter and tachometer, coolant temperature, lube oil pressure and battery condition voltmeter. The control system provides shutdown protection for high coolant temperature, low oil pressure, fail to start and overspeed along with alarms for approaching low oil pressure, approaching low oil pressure, approaching high coolant temperature, low batttery voltage, battery charger failure and control switch not in auto mode with incividual indicator lamps. An engine cool-down timer is included for normal shutdowns.

The 4001E control panel has two additional shutdown protection control channels and one additional alarm circuit channel along with four additional circuit channels which can be programmed for either shutdown or alarm circuits with indicating lamps for alarm and shutdown options.

Terminals are included for interface with remote annunciators of generator set shutdowns and alarms.

The result is a fully automatic generator set controller.

FEATURES

CONSTRUCTION AND FINISH

- Components installed in a heavy duty sheet steel enclosure
- Phosphate chemical pre-coating of steel provides corrosion resistant surface
- Polyester composite powder top-coat forms high gloss and extremely durable finish
- Lockable hinged panel door provides for easy component access

MOUNTING

- Mounted to generator set baseframe on robust steel stand
- Vibration isolated from generator set
- Located at rear of generator set with excellent panel visibility
- Installed as an integral part of the enclosure on enclosed generator sets

INSTRUMENTATION

- AC instruments are 90° deflection, 72 mm square, flush mounting
- AC instruments in accordance with IEC60051 and 60529, DIN43700 and 43701, BSEN60051 and UL94
- Engine gauges are heavy duty, 52 mm diameter, electrically operated

CONTROLS

- Protected by fused DC supply from starting battery
- Printed circuit board assemblies with field proven circuit elements
- Thoroughly tested during manufacture and final test of generator set
- Multi-pin plug and socket connections for ease in servicing
- Switches and pushbuttons are heavy duty industrial type
- Internal AC and DC panel wiring harnesses pre-formed for uniform routing and enhanced interconnect reliability

LEHX1005-03 (09-02)

STANDARD/OPTIONAL FEATURES

4001E AUTOSTART CONTROL PANEL	
STANDARD FEATURES	
Instrumentation	Voltmeter Ammeter Combined frequency and tachometer Hours run counter Coolant temperature gauge Lube oil pressure gauge Battery condition voltmeter
Controls	Run/off/auto switch Lock down stop button (red) Engine preheat pushbutton (if required) Lamp test pushbutton 7 pos voltmeter phase selector switch 4 pos ammeter phase selector switch 3 attempt start timer Cool down timer
Shutdowns with Individual Warning Lamps	Fail to start High coolant temperature Low lube oil pressure Overspeed
Alarms with Individual Warning Lamps	Approaching low oil pressure Approaching high engine temperature Low battery voltage/High battery voltage Battery charger failure Control switch not in auto mode
Remote Signals/ Contacts from Panel	Interface to remote annunciator Terminals for remote emergency stop Common fault alarm signal Volt-free contact for generator set running and common fault alarm signal
Additional Fault Channels	Channels available for optional shutdowns — 2 Channels available for optional alarms — 1 Additional fault channels available — 3 (individually programmable for shutdown or alarm) Note: This panel has seven fault indicating lamps available on the panel face for options. Note: UL base tanks utilize the additional alarm channel for a combined leak detection and low fuel level alarm. Note: When PMA3 has been ordered only PMK1 **OR** PMA4 are available (not both).
	OPTIONAL FEATURES
Instrumentation	PMA3 3 ammeters instead of 1 ammeter and selector switch PMK1 kilowatt meter (not available with PMA3) PML1 lube oil temperature gauge PMA4 static battery charger ammeter PBC5 battery charger 240V AC PBC5L static battery charger 110V AC PSB3 battery charger 240VAC + Boost PSB3L battery charger 110 VAC + Boost PMBCUL3 panel mounted battery charger UL 110V AC PMBCUL5 panel mounted battery charger UL 110V AC PBC3UL battery charger UL 3A 120V AC (engine compartment mounted) PBC10UL battery charger UL 10A 120V AC (engine compartment mounted)
Controls	PSB5 panel emergency stop pushbutton with security key PSS1 speed adjust potentiometer (requires GOVE1 electronic governor) PSV1 voltage adjust potentiometer (±5%) PAA2 audible alarm supplied loose PAA1 panel mounted audible alarm PGR1 set of volt-free contacts for genset running PTC2 auto preheat control circuit (not for use with D150P4 or D200P4) PCL2 panel and canopy lights (canopied sets only)
Shutdowns with Individual Warning Lamps	PPS2 underspeed shutdown PPV1 overvoltage shutdown/PPV3 undervoltage shutdown PPV2 combined over/undervoltage shutdown PPO1 overload shutdown via alarm switch on breaker PPO2 overload shutdown via overcurrent relay
Remote Annunciators	PAN4 8 channel remote annunciator panel (supplied loose) PAN5 16 channel remote annunciator panel (supplied loose) PAN6 Remote annunciator upgrade (Normal/Run control switch) PAN7 Lockdown stop button

Note: Not all combinations of options are available due to space restrictions in the control panel

www.CAT-ElectricPower.com

© 2002 Caterpillar
All rights reserved. Printed in U.S.A.

Materials and specifications are subject to change without notice.
The International System of Units (SI) is used in this publication.

LEHX1005-03 (09-02)

DIESEL GENERATOR SETS

OLYMPIAN™

Exclusively from your Caterpillar® dealer

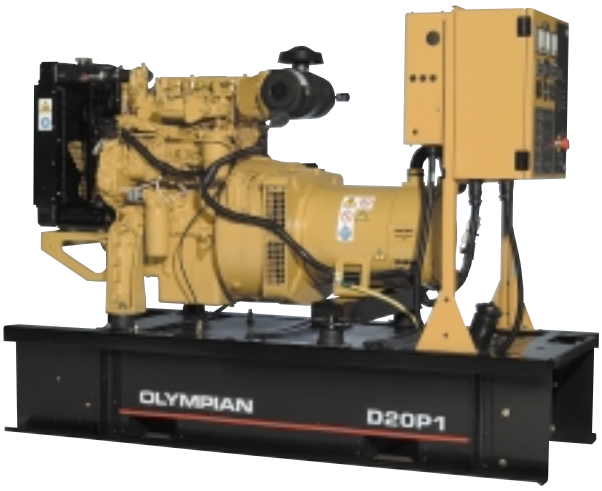

STANDBY 20-30 kW
PRIME 18-27 kW

60 Hz

Model	Standby kW (kVA)	Prime kW (kVA)
D20P1**	20 (25)	18.2 (22.8)
D20P2*	20 (25)	18.2 (22.8)
D20P1S**	20 (20)	18 (18)
D20P2S*	20 (20)	18 (18)
D25P1**	25 (31.3)	22.8 (28.5)
D25P2*	25 (31.3)	22.8 (28.5)
D25P1S**	25 (25)	22.5 (22.5)
D25P2S*	25 (25)	22.5 (22.5)
D30P3**	30 (37.5)	27 (33.8)
D30P4*	28 (35)	25.4 (31.8)

*EPA Approved, Emissions Certified
**50 Hz option is available. Consult factory for more details.

FEATURES

GENERATOR SET
- Complete system designed and built at ISO 9001 certified facilities
- Factory tested to design specifications at full load conditions

ENGINE
- Governor, mechanical
- Electrical system, 12 VDC
- Cartridge type filters
- Battery(ies), rack and cables
- Coolant and lube drains piped to edge of base

GENERATOR
- Insulation system, class H
- Drip proof generator air intake (NEMA 2, IP23)
- Electrical design in accordance with BS5000 Part 99, IEC60034-1, EN61000-6, NEMA MG-1.33

CONTROL SYSTEM
- 2001 Series Autostart control panel
- Vibration isolated NEMA 1 enclosure with lockable hinged door
- DC and AC wiring harnesses

MOUNTING ARRANGEMENT
- Heavy-duty fabricated steel base with lifting points
- Anti-vibration pads to ensure vibration isolation
- Complete OSHA guarding
- Stub-up pipe ready for connection to silencer pipework
- Flexible fuel lines terminated at skid base with NPT connections

COOLING SYSTEM
- Radiator and cooling fan complete with protective guards
- Standard ambient temperatures up to 122° F (40° C)

CIRCUIT BREAKER
- UL/CSA listed
- 3-pole with solid neutral
- NEMA 1 steel enclosure, vibration isolated
- Electrical stub-up area directly below circuit breaker

AUTOMATIC VOLTAGE REGULATOR
- Voltage within ± 0.5% 3 Phase and ± 1.0% Single Phase at steady state from no load to full load
- Provides fast recovery from transient load changes

EQUIPMENT FINISH
- All electroplated hardware
- Anticorrosive paint protection
- High gloss polyurethane paint for durability and scuff resistance

QUALITY STANDARDS
- BS4999, BS5000, BS5514, IEC60034, EN61000-6, NEMA MG-1.33, NFPA 110 (with optional equipment)

DOCUMENTATION
- Operation and maintenance manuals provided
- Wiring diagrams included

WARRANTY
- All equipment carries full manufacturer's warranty Extended warranty terms available

Materials and specifications are subject to change without notice.

OPTIONAL EQUIPMENT*

ENCLOSURE
- B Series weather protective enclosure (includes internal silencer system)
  - Single point lift
  - Panel viewing window
  - External emergency stop pushbutton
- Sound attenuated enclosure (includes internal silencer system)
- Super sound attenuated enclosure (includes internal silencer system)

SILENCER SYSTEM — OPEN UNIT
- Level 1 silencer
- Level 2 silencer
- Level 3 silencer
- Mounting kit
- Through-wall installation kits

ENGINE
- Electronic governor (fully adjustable)
- Battery heater
- Lube oil drain pump
- Lube oil sump heater (D20P1, D20P1S, D25P1, D25P1S, D30P3)

CIRCUIT BREAKER
- Auxiliary voltfree contacts
- Shunt trip (100+ amp breakers)

MOUNTING ACCESSORIES
- Seismic (Zone 4) vibration isolators

GENERATOR
- Anti-condensation heater
- AREP excitation system (D30P3, D30P4)
- Generator upgrade 1 size (D20P1, D20P2, D25P1, D25P2, D30P3, D30P4)

*Some options may not be available on all models. Not all options are listed.

CONTROL SYSTEM
- No control system
- 4001 Autostart control panel
- 4001E Autostart control panel
- Access 4000 digital control panel

FUEL SYSTEM
- Single-walled steel fuel tank
- UL listed closed top-diked skid-mounted fuel tank base (24-hour capacity) with fuel alarm (low level/leak detected)
- Critical high fuel alarm
- Low fuel level alarm and shutdown

REMOTE ANNUNCIATORS
- 8- and 16-channel remote annunciator panel (supplied loose)
- Remote annunciator upgrade normal/run control switch
- Remote annunciator upgrade lockdown emergency stop button

COOLING SYSTEM
- Coolant heater
- Low coolant temperature alarm
- Low coolant level shutdown
- Radiator transition flange

MISCELLANEOUS ACCESSORIES
- Toolkit
- Additional operator's manual pack
- Special enclosure color
- UL listing
- CSA certification
- French or Spanish language labels

EXTENDED WARRANTY
- 36 months
- 48 months
- 60 months
  (See warranty policy for details of coverage)

TESTING
- Factory witness test (restricted to 6 hours — full load, 1.0 pf)

GENERATOR SET DIMENSIONS AND WEIGHTS

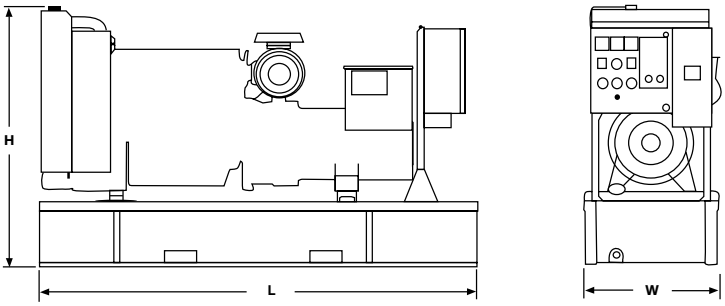

Model	Length in (mm)	Width in (mm)	Height in (mm)	Weight lbs (kg)**
D20P1	69.7 (1770)	28.1 (714)	53.5 (1360)	1471 (667)
D20P2	69.7 (1770)	28.1 (714)	53.3 (1354)	1638 (743)
D20P1S	69.7 (1770)	28.1 (714)	53.5 (1360)	1515 (687)
D20P2S	69.7 (1770)	28.1 (714)	53.3 (1354)	1681 (763)
D25P1	69.7 (1770)	28.1 (714)	53.5 (1360)	1515 (687)
D25P2	69.7 (1770)	28.1 (714)	53.3 (1354)	1638 (743)
D25P1S	69.7 (1770)	28.1 (714)	53.5 (1360)	1537 (697)
D25P2S	69.7 (1770)	28.1 (714)	53.3 (1354)	1681 (763)
D30P3	84.6 (2149)	29.6 (752)	52.8 (1341)	1709 (775)
D30P4	69.7 (1770)	28.1 (714)	53.3 (1354)	1803 (818)

NOTE: General configuration not to be used for installation. See specific dimensional drawings for detail.

**Includes oil and coolant

OLYMPIAN™

Exclusively from your Caterpillar® dealer

SPECIFICATIONS

GENERATOR

Voltage Regulation ..... ±0.5% 3PH and ±1% Single PH at steady state from no load to full load
Frequency ..... ±0.8% for constant load, no load to full load
Waveform Distortion ..... THD < 4%, at no load
Radio Interference ..... Compliance with EN61000-6
Telephone Interference ..... TIF <50, THF <2%
Overspeed Limit ..... 2250 rpm
Insulation ..... Class H
Temperature Rise ..... Within Class H limits
Available Voltages ..... 1-Phase — 120/240, 115/230, 110/220
3-Phase — 277/480, 266/460, 120/240, 127/220, 120/208
Deration ..... Consult factory for available outputs
Ratings ..... At 86° F (30° C), 500 ft. (152.4 m), 60% humidity, 1.0 pf (1-Phase), 0.8 pf (3-Phase)

ENGINE

Manufacturer ..... Perkins
Type 4-Cycle
Aspiration ..... Natural
Stroke — in (mm) 5.00 (127.0)
Piston Speed — ft/sec (m/sec) 25.0 (7.62)
Engine speed — rpm 1800
Air Cleaner Type ..... Dry, replaceable paper element type with restriction indicator

D20P1, D25P1, D20P1S, D25P1S — 3.1524

Cylinder Configuration ..... In-line 3
Displacement — cu in (L) 153 (2.5)
Bore — in (mm) 3.60 (91.4)
Compression Ratio 16.5:1
Governor
Type ..... Mechanical
Class A1
Max Power at Rated rpm — hp (kW)
Standby 42.8 (31.9)
Prime 38.4 (28.7)
BMEP — psi (kPa)
Standby 127.6 (880)
Prime 116 (802)
Regenerative Power — kW 5.7

D20P2, D20P2S, D25P2S — 903-27

Cylinder Configuration ..... In-line 3
Displacement — cu in (L) 164.8 (2.7)
Bore — in (mm) 3.74 (95)
Compression Ratio 17.25:1
Governor
Type ..... Mechanical
Class A1
Max Power at Rated rpm — hp (kW)
Standby 46.9 (35.0)
Prime 42.2 (31.8)
BMEP — psi (kPa)
Standby 125.4 (861)
Prime 114.5 (786)
Regenerative Power — kW 5.7

D25P2, D30P4 — 903-27

Cylinder Configuration ..... In-line 3
Displacement — cu in (L) 164.8 (2.7)
Bore — in (mm) 3.74 (95)
Compression Ratio 17.5:1
Governor
Type ..... Mechanical
Class ..... A1, 4% Droop
Max Power at Rated rpm — hp (kW)
Standby 46.9 (35.0)
Prime 42.2 (31.5)
BMEP — psi (kPa)
Standby 125 (861)
Prime 114.5 (786)
Regenerative Power — kW 5.7

D30P3 — 1004G

Cylinder Configuration ..... In-line 4
Displacement — cu in (L) 243 (3.99)
Bore — in (mm) 3.94 (100)
Compression Ratio 16.0:1
Governor
Type ..... Mechanical
Class A1
Max Power at Rated rpm — hp (kW)
Standby 70.5 (52.5)
Prime 64 (48)
BMEP — psi (kPa)
Standby 127 (877)
Prime 116 (802)
Regenerative Power — kW 10.5

CONTROL PANEL

NEMA 1 steel enclosure with lockable hinged door
Vibration isolated mounted Autostart control panel
Single location customer connector point
Electrical stub-up area directly below control panel

RATING DEFINITIONS

Standby — Applicable for supplying continuous electrical power (at variable load) in the event of a utility power failure. No overload is permitted on these ratings. The generator is peak rated (as defined in ISO8528-3).

Prime — Applicable for supplying continuous electrical power (at variable load) in lieu of commercially purchased power. There is no limitation to the annual hours of operation and the generator set can supply 10 percent overload power for 1 hour in 12 hours.

Consult your Olympian representative for more information.

www.CAT-ElectricPower.com

© 2003 Caterpillar
All rights reserved.
Printed in U.S.A.

Materials and specifications are subject to change without notice.
The International System of Units (SI) is used in this publication.

OLYMPIAN™

Exclusively from your Caterpillar® dealer

D20P1 (3-Phase)

Materials and specifications are subject to change without notice.

Generator Set Technical Data — 1800 rpm/60 Hz		Standby	Prime
Power Rating	kW (kVA)	20 (25)	18.2 (22.8)
Lubricating System			
Type: Full Pressure			
Oil Filter: Spin-On, Full Flow			
Oil Cooler: Watercooled			
Oil Type Required: API CF-4			
Total Oil Capacity	U.S. gal (L)	1.6 (6.17)	1.6 (6.17)
Oil Pan	U.S. gal (L)	1.5 (5.75)	1.5 (5.75)
Fuel System			
Generator Set Fuel Consumption			
100% Load	G/hr (L/hr)	2.21 (8.4)	2.01 (7.6)
75% Load	G/hr (L/hr)	1.72 (6.5)	1.57 (5.9)
50% Load	G/hr (L/hr)	1.28 (4.8)	1.16 (4.4)
Engine Electrical System			
Voltage/Ground: 12/Negative			
Battery Charging Generator Ampere Rating	Amps	45	45
Cooling System			
Water Pump Type: Centrifugal			
Radiator System Capacity Incl. Engine	U.S. gal (L)	3.1 (11.85)	3.1 (11.85)
Maximum Coolant Static Head	Ft H_2O (m H_2O)	12.4 (3.8)	12.4 (3.8)
Coolant Flow Rate	U.S. gal/hr (L/hr)	540 (2460)	540 (2460)
Minimum Temperature to Engine	°F (°C)	169 (76)	169 (76)
Temperature Rise Across Engine	°F (°C)	11 (6.0)	11 (6.0)
Heat Rejected to Coolant at Rated Power	Btu/min (kW)	1200 (21.0)	1020 (18.0)
Total Heat Radiated to Room at Rated Power	Btu/min (kW)	570 (14.1)	510 (13.1)
Radiator Fan Load	Hp (kW)	0.7 (0.5)	0.7 (0.5)
Air Requirements			
Combustion Air Flow	Cfm (m^3/min)	77 (2.2)	77 (2.2)
Maximum Air Cleaner Restriction	In H_2O (kPa)	22 (5.6)	22 (5.6)
Radiator Cooling Air (zero restriction)	Cfm (m^3/min)	3072 (87)	3072 (87)
Generator Cooling Air	Cfm (m^3/min)	382 (10.8)	382 (10.8)
Allowable Air Flow Restriction (After radiator)	In H_2O (kPa)	0.56 (0.139)	0.56 (0.139)
Cooling Airflow (@ rated speed)			
Rate with restriction	Cfm (m^3/min)	2471 (70)	2471 (70)
Exhaust System			
Maximum Allowable Backpressure	In Hg (kPa)	3.0 (10.2)	3.0 (10.2)
Exhaust Flow at Rated kW	Cfm (m^3/min)	246 (7.0)	218 (6.2)
Exhaust Temperature at Rated kW — Dry Exhaust	°F (°C)	1310 (710)	1112 (600)
Generator Set Noise Rating* (Without Attenuation) at 3 ft (1 m)	dB(A)	91	91

Generator Technical Data		277/480V	266/460V	127/220V	120/240V 120/208V
Motor Starting Capability: (30% Voltage Dip)	(kVA)				
	Self Excited	51	48	42	39
	PM Excited**	62	57	51	46
	AREP Excited	62	57	51	46
Full Load Efficiencies:	Standby	87.8	87.6	87.3	87.0
	Prime	88.3	88.1	87.8	87.6
Reactances (per unit): Reactances shown are applicable to the standby rating.	X_d	1.96	2.13	2.33	2.61
	X'_d	0.12	0.13	0.14	0.16
	X''_d	0.060	0.065	0.071	0.080
	X_q	0.98	1.07	1.17	1.30
	X''_q	0.084	0.091	0.100	0.112
	X_2	0.072	0.078	0.086	0.096
	X_0	0.005	0.005	0.006	0.007
Time Constants:		t'_d 25 ms	t''_d 2.5 ms	t'_{do} 409 ms	t_a 4 ms

* dB(A) levels are for guidance only

OLYMPIAN™

Exclusively from your Caterpillar® dealer

D20P1S (1-Phase)

Materials and specifications are subject to change without notice.

Generator Set Technical Data — 1800 rpm/60 Hz		Standby	Prime
Power Rating	kW (kVA)	20 (20)	18 (18)
Lubricating System			
Type: Full Pressure			
Oil Filter: Spin-On, Full Flow			
Oil Cooler: Watercooled			
Oil Type Required: API CF-4			
Total Oil Capacity	U.S. gal (L)	1.6 (6.17)	1.6 (6.17)
Oil Pan	U.S. gal (L)	1.5 (5.75)	1.5 (5.75)
Fuel System			
Generator Set Fuel Consumption			
100% Load	G/hr (L/hr)	2.21 (8.4)	2.01 (7.6)
75% Load	G/hr (L/hr)	1.72 (6.5)	1.57 (5.9)
50% Load	G/hr (L/hr)	1.28 (4.8)	1.16 (4.4)
Engine Electrical System			
Voltage/Ground: 12/Negative			
Battery Charging Generator Ampere Rating	Amps	45	45
Cooling System			
Water Pump Type: Centrifugal			
Radiator System Capacity Incl. Engine	U.S. gal (L)	3.1 (11.85)	3.1 (11.85)
Maximum Coolant Static Head	Ft H_2O (m H_2O)	12.4 (3.8)	12.4 (3.8)
Coolant Flow Rate	U.S. gal/hr (L/hr)	540 (2460)	540 (2460)
Minimum Temperature to Engine	°F (°C)	169 (76)	169 (76)
Temperature Rise Across Engine	°F (°C)	11 (6.0)	11 (6.0)
Heat Rejected to Coolant at Rated Power	Btu/min (kW)	1200 (21.0)	1020 (18.0)
Total Heat Radiated to Room at Rated Power	Btu/min (kW)	570 (14.1)	510 (13.1)
Radiator Fan Load	Hp (kW)	0.7 (0.5)	0.7 (0.5)
Air Requirements			
Combustion Air Flow	Cfm (m^3/min)	77 (2.2)	77 (2.2)
Maximum Air Cleaner Restriction	In H_2O (kPa)	22 (5.6)	22 (5.6)
Radiator Cooling Air (zero restriction)	Cfm (m^3/min)	3072 (87)	3072 (87)
Generator Cooling Air	Cfm (m^3/min)	382 (10.8)	382 (10.8)
Allowable Air Flow Restriction (After radiator)	In H_2O (kPa)	0.56 (0.139)	0.56 (0.139)
Cooling Airflow (@ rated speed)			
Rate with restriction	Cfm (m^3/min)	2471 (70)	2471 (70)
Exhaust System			
Maximum Allowable Backpressure	In Hg (kPa)	3.0 (10.2)	3.0 (10.2)
Exhaust Flow at Rated kW	Cfm (m^3/min)	246 (7.0)	218 (6.2)
Exhaust Temperature at Rated kW — Dry Exhaust	°F (°C)	1310 (710)	1112 (600)
Generator Set Noise Rating* (Without Attenuation) at 3 ft (1 m)	dB(A)	91	91

Generator Technical Data		120/240V	115/230V	110/220V
Motor Starting Capability: (30% Voltage Dip)	(kVA) Self Excited	31	29	25
Full Load Efficiencies:	Standby	83.3	82.7	82.0
	Prime	84.1	83.6	82.9
Reactances (per unit):	X_d	1.86	2.03	2.21
Reactances shown are applicable to the standby rating.	X'_d	0.18	0.20	0.22
	X''_d	0.091	0.099	0.108
	X_q	0.94	1.02	1.12
	X''_q	0.127	0.138	0.151
Time Constants:		t'_d 40 ms	t''_d 4 ms	t'_{do} 452 ms / t_a 6 ms

* dB(A) levels are for guidance only

D20P2 (3-Phase)

Materials and specifications are subject to change without notice.

Generator Set Technical Data — 1800 rpm/60 Hz		Standby	Prime
Power Rating	kW (kVA)	20 (25)	18.2 (22.8)
Lubricating System			
Type: Full Pressure			
Oil Filter: Spin-On, Full Flow			
Oil Cooler: Watercooled			
Oil Type Required: API CF-4			
Total Oil Capacity	U.S. gal (L)	1.5 (5.7)	1.5 (5.7)
Oil Pan	U.S. gal (L)	1.1 (4.2)	1.1 (4.2)
Fuel System			
Generator Set Fuel Consumption			
100% Load	G/hr (L/hr)	2.49 (9.44)	2.17 (8.21)
75% Load	G/hr (L/hr)	1.86 (7.05)	1.62 (6.15)
50% Load	G/hr (L/hr)	1.34 (5.08)	1.17 (4.42)
Engine Electrical System			
Voltage/Ground: 12/Negative			
Battery Charging Generator Ampere Rating	Amps	45	45
Cooling System			
Water Pump Type: Centrifugal			
Radiator System Capacity Incl. Engine	U.S. gal (L)	2.9 (10.1)	2.9 (10.1)
Maximum Coolant Static Head	Ft H_2O (m H_2O)	12.4 (3.8)	12.4 (3.8)
Coolant Flow Rate	U.S. gal/hr (L/hr)	792 (5250)	792 (5250)
Minimum Temperature to Engine	°F (°C)	169 (76)	169 (76)
Temperature Rise Across Engine	°F (°C)	7.2 (4.0)	7.2 (4.0)
Heat Rejected to Coolant at Rated Power	Btu/min (kW)	1138 (20)	1024 (18.0)
Total Heat Radiated to Room at Rated Power	Btu/min (kW)	682 (12.0)	626 (11.0)
Radiator Fan Load	Hp (kW)	0.7 (0.5)	0.7 (0.5)
Air Requirements			
Combustion Air Flow	Cfm (m^3/min)	74.1 (2.1)	74.1 (2.1)
Maximum Air Cleaner Restriction	In H_2O (kPa)	20.0 (5.0)	20.0 (5.0)
Radiator Cooling Air (zero restriction)	Cfm (m^3/min)	2436 (69)	2436 (69)
Generator Cooling Air	Cfm (m^3/min)	382 (10.8)	382 (10.8)
Allowable Air Flow Restriction (After radiator)	In H_2O (kPa)	0.5 (0.125)	0.5 (0.125)
Cooling Airflow (@ rated speed)			
Rate with restriction	Cfm (m^3/min)	2330 (66)	2330 (66)
Exhaust System			
Maximum Allowable Backpressure	In Hg (kPa)	1.5 (5.0)	1.5 (5.0)
Exhaust Flow at Rated kW	Cfm (m^3/min)	227.8 (6.45)	215.7 (6.11)
Exhaust Temperature at Rated kW — Dry Exhaust	°F (°C)	1220 (660)	1128 (609)
Generator Set Noise Rating* (Without Attenuation) at 3 ft (1 m)	dB(A)	94.4	94.4

Generator Technical Data		277/480V	266/460V	127/220V	120/240V 120/208V
Motor Starting Capability: (30% Voltage Dip)	(kVA)				
	Self Excited	51	48	42	39
	PM Excited**	62	57	51	46
	AREP Excited	62	57	51	46
Full Load Efficiencies:	Standby	87.1	86.7	86.4	85.9
	Prime	87.6	87.3	87.0	86.6
Reactances (per unit): Reactances shown are applicable to the standby rating.	X_d	1.96	2.13	2.33	2.61
	X'_d	0.12	0.13	0.14	0.16
	X''_d	0.060	0.065	0.071	0.080
	X_q	0.98	1.07	1.17	1.30
	X''_q	0.084	0.091	0.100	0.112
	X_2	0.072	0.078	0.086	0.096
	X_0	0.005	0.005	0.006	0.007
Time Constants:		t'_d 25 ms	t''_d 2.5 ms	t'_{do} 409 ms	t_a 4 ms

* dB(A) levels are for guidance only

D20P2S (1-Phase)

Materials and specifications are subject to change without notice.

Generator Set Technical Data — 1800 rpm/60 Hz		Standby	Prime
Power Rating	kW (kVA)	20 (20)	18 (18)
Lubricating System			
Type: Full Pressure			
Oil Filter: Spin-On, Full Flow			
Oil Cooler: Watercooled			
Oil Type Required: API CF-4			
Total Oil Capacity	U.S. gal (L)	1.5 (5.7)	1.5 (5.7)
Oil Pan	U.S. gal (L)	1.1 (4.2)	1.1 (4.2)
Fuel System			
Generator Set Fuel Consumption			
100% Load	G/hr (L/hr)	2.49 (9.44)	2.17 (8.21)
75% Load	G/hr (L/hr)	1.86 (7.05)	1.62 (6.15)
50% Load	G/hr (L/hr)	1.34 (5.08)	1.17 (4.42)
Engine Electrical System			
Voltage/Ground: 12/Negative			
Battery Charging Generator Ampere Rating	Amps	45	45
Cooling System			
Water Pump Type: Centrifugal			
Radiator System Capacity Incl. Engine	U.S. gal (L)	2.9 (10.1)	2.9 (10.1)
Maximum Coolant Static Head	Ft H_2O (m H_2O)	12.4 (3.8)	12.4 (3.8)
Coolant Flow Rate	U.S. gal/hr (L/hr)	792 (5250)	792 (5250)
Minimum Temperature to Engine	°F (°C)	169 (76)	169 (76)
Temperature Rise Across Engine	°F (°C)	7.2 (4.0)	7.2 (4.0)
Heat Rejected to Coolant at Rated Power	Btu/min (kW)	1138 (20)	1024 (18.0)
Total Heat Radiated to Room at Rated Power	Btu/min (kW)	682 (12.0)	626 (11.0)
Radiator Fan Load	Hp (kW)	0.7 (0.5)	0.7 (0.5)
Air Requirements			
Combustion Air Flow	Cfm (m^3/min)	74.1 (2.1)	74.1 (2.1)
Maximum Air Cleaner Restriction	In H_2O (kPa)	20.0 (5.0)	20.0 (5.0)
Radiator Cooling Air (zero restriction)	Cfm (m^3/min)	2436 (69)	2436 (69)
Generator Cooling Air	Cfm (m^3/min)	382 (10.8)	382 (10.8)
Allowable Air Flow Restriction (After radiator)	In H_2O (kPa)	0.5 (0.125)	0.5 (0.125)
Cooling Airflow (@ rated speed) Rate with restriction	Cfm (m^3/min)	2330 (66)	2330 (66)
Exhaust System			
Maximum Allowable Backpressure	In Hg (kPa)	1.5 (5.0)	1.5 (5.0)
Exhaust Flow at Rated kW	Cfm (m^3/min)	227.8 (6.45)	215.7 (6.11)
Exhaust Temperature at Rated kW — Dry Exhaust	°F (°C)	1220 (660)	1128 (609)
Generator Set Noise Rating* (Without Attenuation) at 3 ft (1 m)	dB(A)	94.4	94.4

Generator Technical Data		120/240V	115/230V	110/220V
Motor Starting Capability: (30% Voltage Dip)	(kVA) Self Excited	31	29	25
Full Load Efficiencies:	Standby	85	84.3	83.9
	Prime	85	84.3	83.9
Reactances (per unit): Reactances shown are applicable to the standby rating.	X_d	1.86	2.03	2.21
	X'_d	0.18	0.20	0.22
	X''_d	0.091	0.099	0.108
	X_q	0.94	1.02	1.12
	X''_q	0.127	0.138	0.151
Time Constants:		t'_d 40 ms	t''_d 4 ms	t'_{do} 452 ms / t_a 6 ms

* dB(A) levels are for guidance only

D25P1 (3-Phase)

Materials and specifications are subject to change without notice.

Generator Set Technical Data — 1800 rpm/60 Hz		Standby	Prime
Power Rating	kW (kVA)	25 (31.3)	22.8 (28.5)
Lubricating System			
Type: Full Pressure			
Oil Filter: Spin-On, Full Flow			
Oil Cooler: Watercooled			
Oil Type Required: API CF-4			
Total Oil Capacity	U.S. gal (L)	1.6 (6.17)	1.6 (6.17)
Oil Pan	U.S. gal (L)	1.5 (5.75)	1.5 (5.75)
Fuel System			
Generator Set Fuel Consumption			
100% Load	G/hr (L/hr)	2.21 (8.4)	2.01 (7.6)
75% Load	G/hr (L/hr)	1.72 (6.5)	1.57 (5.9)
50% Load	G/hr (L/hr)	1.28 (4.8)	1.16 (4.4)
Engine Electrical System			
Voltage/Ground: 12/Negative			
Battery Charging Generator Ampere Rating	Amps	45	45
Cooling System			
Water Pump Type: Centrifugal			
Radiator System Capacity Incl. Engine	U.S. gal (L)	3.1 (11.85)	3.1 (11.85)
Maximum Coolant Static Head	Ft H_2O (m H_2O)	12.4 (3.8)	12.4 (3.8)
Coolant Flow Rate	U.S. gal/hr (L/hr)	540 (2460)	540 (2460)
Minimum Temperature to Engine	°F (°C)	169 (76)	169 (76)
Temperature Rise Across Engine	°F (°C)	11 (6.0)	11 (6.0)
Heat Rejected to Coolant at Rated Power	Btu/min (kW)	1200 (21.0)	1020 (18.0)
Total Heat Radiated to Room at Rated Power	Btu/min (kW)	570 (14.1)	510 (13.1)
Radiator Fan Load	Hp (kW)	0.7 (0.5)	0.7 (0.5)
Air Requirements			
Combustion Air Flow	Cfm (m^3/min)	77 (2.2)	77 (2.2)
Maximum Air Cleaner Restriction	In H_2O (kPa)	22 (5.6)	22 (5.6)
Radiator Cooling Air (zero restriction)	Cfm (m^3/min)	3072 (87)	3072 (87)
Generator Cooling Air	Cfm (m^3/min)	382 (10.8)	382 (10.8)
Allowable Air Flow Restriction (After radiator)	In H_2O (kPa)	0.56 (0.139)	0.56 (0.139)
Cooling Airflow (@ rated speed)			
Rate with restriction	Cfm (m^3/min)	2471 (70)	2471 (70)
Exhaust System			
Maximum Allowable Backpressure	In Hg (kPa)	3.0 (10.2)	3.0 (10.2)
Exhaust Flow at Rated kW	Cfm (m^3/min)	246 (7.0)	218 (6.2)
Exhaust Temperature at Rated kW — Dry Exhaust	°F (°C)	1310 (710)	1112 (600)
Generator Set Noise Rating* (Without Attenuation) at 3 ft (1 m)	dB(A)	91	91

Generator Technical Data		277/480V	266/460V	127/220V	120/240V 120/208V
Motor Starting Capability: (30% Voltage Dip)	(kVA)				
	Self Excited	69	62	57	51
	PM Excited**	82	75	69	62
	AREP Excited	82	75	69	62
Full Load Efficiencies:	Standby	89.7	89.9	89.7	88.8
	Prime	90.0	89.9	89.7	89.4
Reactances (per unit): Reactances shown are applicable to the standby rating.	X_d	1.91	2.08	2.27	2.54
	X'_d	0.10	0.11	0.12	0.14
	X''_d	0.052	0.057	0.062	0.069
	X_q	0.95	1.03	1.13	1.26
	X''_q	0.074	0.081	0.088	0.099
	X_2	0.064	0.069	0.076	0.085
	X_0	0.005	0.006	0.006	0.007
Time Constants:		t'_d 25 ms	t''_d 2.5 ms	t'_{do} 452 ms	t_a 4 ms

* dB(A) levels are for guidance only

D25P1S (1-Phase)

Materials and specifications are subject to change without notice.

Generator Set Technical Data — 1800 rpm/60 Hz		Standby	Prime
Power Rating	kW (kVA)	25 (25)	22.5 (22.5)
Lubricating System			
Type: Full Pressure			
Oil Filter: Spin-On, Full Flow			
Oil Cooler: Watercooled			
Oil Type Required: API CF-4			
Total Oil Capacity	U.S. gal (L)	1.6 (6.17)	1.6 (6.17)
Oil Pan	U.S. gal (L)	1.5 (5.75)	1.5 (5.75)
Fuel System			
Generator Set Fuel Consumption			
100% Load	G/hr (L/hr)	2.21 (8.4)	2.01 (7.6)
75% Load	G/hr (L/hr)	1.72 (6.5)	1.57 (5.9)
50% Load	G/hr (L/hr)	1.28 (4.8)	1.16 (4.4)
Engine Electrical System			
Voltage/Ground: 12/Negative			
Battery Charging Generator Ampere Rating	Amps	45	45
Cooling System			
Water Pump Type: Centrifugal			
Radiator System Capacity Incl. Engine	U.S. gal (L)	3.1 (11.85)	3.1 (11.85)
Maximum Coolant Static Head	Ft H_2O (m H_2O)	12.4 (3.8)	12.4 (3.8)
Coolant Flow Rate	U.S. gal/hr (L/hr)	540 (2460)	540 (2460)
Minimum Temperature to Engine	°F (°C)	169 (76)	169 (76)
Temperature Rise Across Engine	°F (°C)	11 (6.0)	11 (6.0)
Heat Rejected to Coolant at Rated Power	Btu/min (kW)	1200 (21.0)	1020 (18.0)
Total Heat Radiated to Room at Rated Power	Btu/min (kW)	570 (14.1)	510 (13.1)
Radiator Fan Load	Hp (kW)	0.7 (0.5)	0.7 (0.5)
Air Requirements			
Combustion Air Flow	Cfm (m^3/min)	77 (2.2)	77 (2.2)
Maximum Air Cleaner Restriction	In H_2O (kPa)	22 (5.6)	22 (5.6)
Radiator Cooling Air (zero restriction)	Cfm (m^3/min)	3072 (87)	3072 (87)
Generator Cooling Air	Cfm (m^3/min)	382 (10.8)	382 (10.8)
Allowable Air Flow Restriction (After radiator)	In H_2O (kPa)	0.56 (0.139)	0.56 (0.139)
Cooling Airflow (@ rated speed) Rate with restriction	Cfm (m^3/min)	2471 (70)	2471 (70)
Exhaust System			
Maximum Allowable Backpressure	In Hg (kPa)	3.0 (10.2)	3.0 (10.2)
Exhaust Flow at Rated kW	Cfm (m^3/min)	246 (7.0)	218 (6.2)
Exhaust Temperature at Rated kW — Dry Exhaust	°F (°C)	1310 (710)	1112 (600)
Generator Set Noise Rating* (Without Attenuation) at 3 ft (1 m)	dB(A)	91	91

Generator Technical Data		120/240V	115/230V	110/220V
Motor Starting Capability: (30% Voltage Dip)	(kVA) Self Excited	50	47	43
Full Load Efficiencies:	Standby	83.0	83.0	83.0
	Prime	84.5	84.5	84.5
Reactances (per unit):	X_d	1.30	1.42	1.55
	X'_d	0.21	0.23	0.25
Reactances shown are applicable to the standby rating.	X''_d	0.096	0.104	0.114
	X_q	0.66	0.71	0.78
	X''_q	0.134	0.146	0.160
Time Constants:		t'_d 40ms	t''_d 6ms	t'_{do} 400ms	t_a 8ms

* dB(A) levels are for guidance only

D25P2 (3-Phase)

Materials and specifications are subject to change without notice.

Generator Set Technical Data — 1800 rpm/60 Hz		Standby	Prime
Power Rating	kW (kVA)	25 (31.3)	22.8 (28.5)
Lubricating System			
Type: Full Pressure			
Oil Filter: Spin-On, Full Flow			
Oil Cooler: Watercooled			
Oil Type Required: API CF-4			
Total Oil Capacity	U.S. gal (L)	1.5 (5.7)	1.5 (5.7)
Oil Pan	U.S. gal (L)	1.1 (4.2)	1.1 (4.2)
Fuel System			
Generator Set Fuel Consumption			
100% Load	G/hr (L/hr)	2.49 (9.44)	2.17 (8.21)
75% Load	G/hr (L/hr)	1.86 (7.05)	1.62 (6.15)
50% Load	G/hr (L/hr)	1.34 (5.08)	1.17 (4.42)
Engine Electrical System			
Voltage/Ground: 12/Negative			
Battery Charging Generator Ampere Rating	Amps	45	45
Cooling System			
Water Pump Type: Centrifugal			
Radiator System Capacity Incl. Engine	U.S. gal (L)	2.9 (10.1)	2.9 (10.1)
Maximum Coolant Static Head	Ft H_2O (m H_2O)	12.4 (3.8)	12.4 (3.8)
Coolant Flow Rate	U.S. gal/hr (L/hr)	792 (5250)	792 (5250)
Minimum Temperature to Engine	°F (°C)	169 (76)	169 (76)
Temperature Rise Across Engine	°F (°C)	7.2 (4.0)	7.2 (4.0)
Heat Rejected to Coolant at Rated Power	Btu/min (kW)	1138 (20)	1024 (18.0)
Total Heat Radiated to Room at Rated Power	Btu/min (kW)	682 (12.0)	626 (11.0)
Radiator Fan Load	Hp (kW)	0.7 (0.5)	0.7 (0.5)
Air Requirements			
Combustion Air Flow	Cfm (m^3/min)	74.1 (2.1)	74.1 (2.1)
Maximum Air Cleaner Restriction	In H_2O (kPa)	20.0 (5.0)	20.0 (5.0)
Radiator Cooling Air (zero restriction)	Cfm (m^3/min)	2436 (69)	2436 (69)
Generator Cooling Air	Cfm (m^3/min)	382 (10.8)	382 (10.8)
Allowable Air Flow Restriction (After radiator)	In H_2O (kPa)	0.5 (0.125)	0.5 (0.125)
Cooling Airflow (@ rated speed)			
Rate with restriction	Cfm (m^3/min)	2330 (66)	2330 (66)
Exhaust System			
Maximum Allowable Backpressure	In Hg (kPa)	1.5 (5.0)	1.5 (5.0)
Exhaust Flow at Rated kW	Cfm (m^3/min)	227.8 (6.45)	215.7 (6.11)
Exhaust Temperature at Rated kW — Dry Exhaust	°F (°C)	1220 (660)	1128 (609)
Generator Set Noise Rating* (Without Attenuation) at 3 ft (1 m)	dB(A)	94.4	94.4

Generator Technical Data		277/480V	266/460V	127/220V	120/240V 120/208V
Motor Starting Capability: (30% Voltage Dip)	(kVA)				
	Self Excited	69	62	57	51
	PM Excited**	82	75	69	62
	AREP Excited	82	75	69	62
Full Load Efficiencies:	Standby	89.4	89.2	88.9	88.6
	Prime	89.4	89.2	88.9	88.6
Reactances (per unit): Reactances shown are applicable to the standby rating.	X_d	1.91	2.08	2.27	2.54
	X'_d	0.10	0.11	0.12	0.14
	X''_d	0.052	0.057	0.062	0.069
	X_q	0.95	1.03	1.13	1.26
	X''_q	0.074	0.081	0.088	0.099
	X_2	0.064	0.069	0.076	0.085
	X_0	0.005	0.006	0.006	0.007
Time Constants:		t'_d 25 ms	t''_d 2.5 ms	t'_{do} 452 ms	t_a 4 ms

* dB(A) levels are for guidance only

D25P2S (1-Phase)

Materials and specifications are subject to change without notice.

Generator Set Technical Data — 1800 rpm/60 Hz		Standby	Prime
Power Rating (at 240V)	kW (kVA)	25 (25)	22.5 (22.5)
Lubricating System			
Type: Full Pressure			
Oil Filter: Spin-On, Full Flow			
Oil Cooler: Watercooled			
Oil Type Required: API CF-4			
Total Oil Capacity	U.S. gal (L)	1.5 (5.7)	1.5 (5.7)
Oil Pan	U.S. gal (L)	1.1 (4.2)	1.1 (4.2)
Fuel System			
Generator Set Fuel Consumption			
100% Load	G/hr (L/hr)	2.49 (9.44)	2.17 (8.21)
75% Load	G/hr (L/hr)	1.86 (7.05)	1.62 (6.15)
50% Load	G/hr (L/hr)	1.34 (5.08)	1.17 (4.42)
Engine Electrical System			
Voltage/Ground: 12/Negative			
Battery Charging Generator Ampere Rating	Amps	45	45
Cooling System			
Water Pump Type: Centrifugal			
Radiator System Capacity Incl. Engine	U.S. gal (L)	2.9 (11)	2.9 (11)
Maximum Coolant Static Head	Ft H_2O (m H_2O)	12.4 (3.8)	12.4 (3.8)
Coolant Flow Rate	U.S. gal/hr (L/hr)	792 (3000)	792 (3000)
Minimum Temperature to Engine	°F (°C)	169 (76)	169 (76)
Temperature Rise Across Engine	°F (°C)	7.2 (4.0)	7.2 (4.0)
Heat Rejected to Coolant at Rated Power	Btu/min (kW)	1138 (20)	1024 (18.0)
Total Heat Radiated to Room at Rated Power	Btu/min (kW)	682 (12.0)	626 (11.0)
Radiator Fan Load	Hp (kW)	0.7 (0.5)	0.7 (0.5)
Air Requirements			
Combustion Air Flow	Cfm (m^3/min)	74.1 (2.1)	74.1 (2.1)
Maximum Air Cleaner Restriction	In H_2O (kPa)	20 (5.0)	20 (5.0)
Radiator Cooling Air (zero restriction)	Cfm (m^3/min)	2436 (69)	2436 (69)
Generator Cooling Air	Cfm (m^3/min)	382 (10.8)	382 (10.8)
Allowable Air Flow Restriction (After radiator)	In H_2O (kPa)	0.5 (0.125)	0.5 (0.125)
Cooling Airflow (@ rated speed) Rate with restriction	Cfm (m^3/min)	2330 (66)	2330 (66)
Exhaust System			
Maximum Allowable Backpressure	In Hg (kPa)	1.5 (5.0)	1.5 (5.0)
Exhaust Flow at Rated kW	Cfm (m^3/min)	227.8 (6.45)	215.7 (6.11)
Exhaust Temperature at Rated kW — Dry Exhaust	°F (°C)	1220 (660)	1128 (609)
Generator Set Noise Rating* (Without Attenuation) at 3 ft (1 m)	dB(A)	94.4	94.4

Generator Technical Data		120/240V	115/230V	110/220V
Motor Starting Capability: (30% Voltage Dip)	(kVA) Self Excited	50	47	43
Full Load Efficiencies:	Standby	89.5	89.1	88.5
	Prime	89.5	89.1	88.5
Reactances (per unit):	X_d	1.30	1.42	1.55
	X'_d	0.21	0.23	0.25
Reactances shown are applicable to the standby rating.	X''_d	0.096	0.104	0.114
	X_q	0.66	0.71	0.78
	X''_q	0.134	0.146	0.160
Time Constants:		t'_d 40ms	t''_d 6ms	t'_{do} 400ms	t_a 8ms

* dB(A) levels are for guidance only

D30P3 (3-Phase)

Materials and specifications are subject to change without notice.

Generator Set Technical Data — 1800 rpm/60 Hz		Standby	Prime
Power Rating	kW (kVA)	30 (37.5)	27 (33.8)
Lubricating System			
Type: Full Pressure			
Oil Filter: Spin-On, Full Flow			
Oil Cooler: Watercooled			
Oil Type Required: API CF-4			
Total Oil Capacity	U.S. gal (L)	2.1 (8.1)	2.1 (8.1)
Oil Pan	U.S. gal (L)	1.8 (6.9)	1.8 (6.9)
Fuel System			
Generator Set Fuel Consumption			
100% Load	G/hr (L/hr)	3.34 (12.69)	3.04 (11.54)
75% Load	G/hr (L/hr)	2.51 (9.52)	2.28 (8.65)
50% Load	G/hr (L/hr)	1.67 (6.35)	1.52 (5.77)
Engine Electrical System			
Voltage/Ground: 12/Negative			
Battery Charging Generator Ampere Rating	Amps	45	45
Cooling System			
Water Pump Type: Centrifugal			
Radiator System Capacity Incl. Engine	U.S. gal (L)	4.2 (15.7)	4.2 (15.7)
Maximum Coolant Static Head	Ft H_2O (m H_2O)	6.7 (2.0)	6.7 (2.0)
Coolant Flow Rate	U.S. gal/hr (L/hr)	1791 (6660)	1791 (6660)
Minimum Temperature to Engine	°F (°C)	158 (70)	158 (70)
Temperature Rise Across Engine	°F (°C)	13.8 (7.7)	13.8 (7.7)
Heat Rejected to Coolant at Rated Power	Btu/min (kW)	1934 (44)	1763 (38)
Total Heat Radiated to Room at Rated Power	Btu/min (kW)	910 (9.5)	796 (6)
Radiator Fan Load	Hp (kW)	5.5 (4.1)	5.5 (4.1)
Air Requirements			
Combustion Air Flow	Cfm (m^3/min)	111 (3.15)	112.5 (3.19)
Maximum Air Cleaner Restriction	In H_2O (kPa)	8 (2.0)	8 (2.0)
Radiator Cooling Air (zero restriction)	Cfm (m^3/min)	8263 (234)	8263 (234)
Generator Cooling Air	Cfm (m^3/min)	382 (10.8)	382 (10.8)
Allowable Air Flow Restriction (After radiator)	In H_2O (kPa)	0.48 (0.120)	0.48 (0.120)
Cooling Airflow (@ rated speed)			
Rate with restriction	Cfm (m^3/min)	6886 (195)	6886 (195)
Exhaust System			
Maximum Allowable Backpressure	In Hg (kPa)	1.5 (5.0)	1.5 (5.0)
Exhaust Flow at Rated kW	Cfm (m^3/min)	343 (9.72)	321 (9.09)
Exhaust Temperature at Rated kW — Dry Exhaust	°F (°C)	1274 (690)	1130 (610)
Generator Set Noise Rating* (Without Attenuation) at 3 ft (1 m)	dB(A)	97	97

Generator Technical Data		277/480V	266/460V	127/220V	120/240V 120/208V
Motor Starting Capability: (30% Voltage Dip)	(kVA)				
	Self Excited	72	66	60	54
	PM Excited**	85	78	72	64
	AREP Excited	85	78	72	64
Full Load Efficiencies:	Standby	90.1	89.9	89.5	89.0
	Prime	90.4	90.2	89.9	89.5
Reactances (per unit): Reactances shown are applicable to the standby rating.	X_d	2.21	2.40	2.63	2.94
	X'_d	0.12	0.13	0.14	0.16
	X''_d	0.058	0.064	0.070	0.078
	X_q	0.10	1.20	1.31	1.47
	X''_q	0.083	0.090	0.098	0.110
	X_2	0.071	0.077	0.084	0.094
	X_0	0.006	0.006	0.007	0.007
Time Constants:		t'_d 25 ms	t''_d 2.5 ms	t'_{do} 469 ms	t_a 4 ms

* dB(A) levels are for guidance only

D30P4 (3-Phase)

Materials and specifications are subject to change without notice.

Generator Set Technical Data — 1800 rpm/60 Hz		Standby	Prime
Power Rating	kW (kVA)	28 (35)	25.4 (31.8)
Lubricating System			
Type: Full Pressure			
Oil Filter: Spin-On, Full Flow			
Oil Cooler: Watercooled			
Oil Type Required: API CF-4			
Total Oil Capacity	U.S. gal (L)	1.5 (5.7)	1.5 (5.7)
Oil Pan	U.S. gal (L)	1.1 (4.2)	1.1 (4.2)
Fuel System			
Generator Set Fuel Consumption			
100% Load	G/hr (L/hr)	2.49 (9.44)	2.17 (8.21)
75% Load	G/hr (L/hr)	1.86 (7.05)	1.62 (6.15)
50% Load	G/hr (L/hr)	1.34 (5.08)	1.17 (4.42)
Engine Electrical System			
Voltage/Ground: 12/Negative			
Battery Charging Generator Ampere Rating	Amps	45	45
Cooling System			
Water Pump Type: Centrifugal			
Radiator System Capacity Incl. Engine	U.S. gal (L)	2.9 (10.1)	2.9 (10.1)
Maximum Coolant Static Head	Ft H_2O (m H_2O)	12.4 (3.8)	12.4 (3.8)
Coolant Flow Rate	U.S. gal/hr (L/hr)	792 (5250)	792 (5250)
Minimum Temperature to Engine	°F (°C)	169 (76)	169 (76)
Temperature Rise Across Engine	°F (°C)	7.2 (4.0)	7.2 (4.0)
Heat Rejected to Coolant at Rated Power	Btu/min (kW)	1138 (20)	1024 (18.0)
Total Heat Radiated to Room at Rated Power	Btu/min (kW)	682 (12.0)	626 (11.0)
Radiator Fan Load	Hp (kW)	0.7 (0.5)	0.7 (0.5)
Air Requirements			
Combustion Air Flow	Cfm (m^3/min)	74.1 (2.1)	74.1 (2.1)
Maximum Air Cleaner Restriction	In H_2O (kPa)	20.0 (5.0)	20.0 (5.0)
Radiator Cooling Air (zero restriction)	Cfm (m^3/min)	2436 (69)	2436 (69)
Generator Cooling Air	Cfm (m^3/min)	382 (10.8)	382 (10.8)
Allowable Air Flow Restriction (After radiator)	In H_2O (kPa)	0.5 (0.125)	0.5 (0.125)
Cooling Airflow (@ rated speed)			
Rate with restriction	Cfm (m^3/min)	2330 (66)	2330 (66)
Exhaust System			
Maximum Allowable Backpressure	In Hg (kPa)	1.5 (5.0)	1.5 (5.0)
Exhaust Flow at Rated kW	Cfm (m^3/min)	227.8 (6.45)	215.7 (6.11)
Exhaust Temperature at Rated kW — Dry Exhaust	°F (°C)	1220 (660)	1128 (609)
Generator Set Noise Rating* (Without Attenuation) at 3 ft (1 m)	dB(A)	94.4	94.4

Generator Technical Data		277/480V	266/460V	127/220V	120/240V 120/208V
Motor Starting Capability: (30% Voltage Dip)	(kVA)				
	Self Excited	72	66	60	54
	PM Excited**	85	78	72	64
	AREP Excited	85	78	72	64
Full Load Efficiencies:	Standby	89.9	89.7	89.5	89.1
	Prime	89.9	89.7	89.5	89.1
Reactances (per unit): Reactances shown are applicable to the standby rating.	X_d	2.06	2.24	2.45	2.74
	X'_d	0.11	0.12	0.13	0.15
	X''_d	0.055	0.060	0.065	0.073
	X_q	1.03	1.12	1.23	1.37
	X''_q	0.077	0.083	0.091	0.102
	X_2	0.066	0.071	0.078	0.087
	X_0	0.005	0.005	0.1006	0.007
Time Constants:		t'_d 25 ms	t''_d 2.5 ms	t'_{do} 469 ms	t_a 4 ms

* dB(A) levels are for guidance only